Vol.4

SEIHO Air Distribution & Ventilation Equipment

SEIHO®

www.seiho.com

Contents

About Us ---------- 3
Featured Projects ---------- 4
Product Index ---------- 6

Residential Ceiling MINI Diffusers
Residential Ceiling MINI Diffuser TT/TT-P ---------- 10
Residential Ceiling MINI Diffuser for Horizontal & Vertical Air Flow TX/TX-P ---------- 11

Aluminum SpotDiffusers
SpotDiffuser PK/PK-E ---------- 14
SpotPac PKP ---------- 18
Air Shower Nozzle PK-A/PK-AD ---------- 19
SpotDiffuser w/ Round Duct Adapter PK-R/PK-RA ---------- 20
SpotDiffuser w/ Condensation Control Air Guide PK-K ---------- 22

TurboNozzle Diffusers
Aluminum TurboNozzle NT/NP ---------- 24
TurboNozzle Panel NT-P ---------- 25
Aluminum TurboNozzle (Surface & Spiral Duct Mounted) NTX/NTX-R ---------- 28
Aluminum Reversible TurboNozzle NX ---------- 30
Reversible TurboNozzle Panel NX-P ---------- 31

Round Grilles & Dampers
Double Deflection Round Grille RHV ---------- 34
Double Deflection Round Grille NR-B ---------- 36
Round Lattice Grille EC ---------- 38
Butterfly Damper BS ---------- 38

Volume Adjustable Grilles
Adjustable Plastic Grille JSP ---------- 40
Adjustable Aluminum Grille JRC ---------- 41
Adjustable Plastic Grille JRA ---------- 41
Adjustable Plastic Grille DK-M/DK-M3 ---------- 41

Vent Caps
Stainless Steel Vent Cap SX-S/SFX-S ---------- 42
Aluminum Vent Cap KX ---------- 42
Aluminum Vent Cap SX/SFX/SXL ---------- 43

Dryer Vents
Aluminum Dryer Vent SB-P/SFB-P ---------- 46
Aluminum Dryer Vent SB/SFB ---------- 47
Aluminum Dryer Vent SFZ/SFZC ---------- 48
Stainless Steel Dryer Vent RCA-S/RCC-S ---------- 49

Photos of Air Patterns ---------- 50

About Us

The SEIHO International, Inc. was established in 1986 in Pasadena, California as a subsidiary of SEIHO Kogyo, a leading manufacturer of Air Distribution Equipment and Vent Louvers in Japan, who has been doing business in the HVAC industry for over a quarter of a century.

SEIHO International, Inc. is a manufacturer of contemporary designs of Diffusers, Nozzles, Grilles and Registers, such as aluminum SpotDiffusers, aluminum TurboNozzle diffusers, double deflection round grilles and aluminum / stainless steel vent caps.

Our products are manufactured in state of the art production facilities in Los Angeles, U.S.A. and Tokyo, Japan. Our superior products with its unique design, refined finish and durability have been used for many different applications in both residential and commercial buildings, and we have been enjoying an excellent reputation with our customers. In fact, our products have been specified for many prestigious projects including government buildings, up scale retail stores, airports, convention centers, and military facilities.

In effort to provide our customers with the most effective and innovative solutions to unique project requirements, we have been continuously adding and improving our products every year. Today, Seiho products are being represented in the most major cities of North America, Canada and overseas through an established network of manufacturers' representatives.

The diffusers and grilles come in various types, several sizes and different colors. They can be powder coated to any color of your choice. Most of the items are in stock at our warehouse and we will fulfill your order promptly.

Because of our high quality products and excellent customer service practices, we have acquired many satisfied customers. We are sure that you will be 100% satisfied with our products and exceptional services.

Featured Projects



SEIHO products have been specified and installed on numerous projects throughout the world. Here is a partial listing:

Residential Ceiling MINI Diffusers

Yard House Restaurant: Portland, OR (TT8P x 14), Tucker, GA (TT8P x 10), Hanover, MA (TT8PW x 18), Virginia Beach, VA (TT8 x 20), Modesto, CA (TT8W x 25), Sacramento, CA (TT8P x 44), Yonkers, NY (TT8P x 31), Santa Fe Springs, CA (TT8P x 23), San Jose, CA (TT8P x 36), Lakewood, CO (TT8P x 18), Red Rock, NV (TT8P x 21),Hallandale, FL (TT8P x 20), Coral Gables, FL (TT8P x 13), San Antonio, TX (TT8P x 20), Hialeah, FL (TT8P x 13, Honolulu, HI (TT8P x 6), Cincinatti, OH (TT8P x 36), Yonkers, NY (TT8P x 29)
Clinton Elementary School: Columbus, OH (TT4W x 29)
Eastview Retirement Community: Middlebury, VT (TT4 x 13, TT6 x 91, TT8 x 14)
Cambridge Innovation Center: Lakewood, CO (TT6 x 29)
Central Ohio Transit Authority Administration: Columbus, OH (TT4W x 52, TT6W x 6)
The Greentree Restaurant & Bar: Bronx, NY (TT8 X 12, TT6 X 6, TT6W X 21)
Rocky Mountain Chocolate Factory: Vancouver, B.C. Canada (TT8W x 21, TT8 x 2, TT6W x 1, TT4W x 3)
University of Rochester - Meliora Hall: Rochester, NY (TT4P x 16)
Harry's Tap Room: Arlington, VA (TT6 x 31, TT8 x 2)
2010 Vancouver Olympic Village: Vancouver, B.C. Canada (TT6W x 490, TT4W x 302)
Andaz Napa Hotel: Napa, CA (TT8 x 49)
The Falls Golf Course: Chilliwack, B.C. Canada (TT8W x 8, TT6W x 32)
University of Toledo: Toledo, OH (TT8 x 21)
Paramount Pictures: Hollywood, CA (TT8 x 22)
Siemens Healthcare Diagnostics: Newark, DE (TX4 x 22)
BIO Chambers: Winnipeg, B.C., Canada(TT4 x 400)
Syracuse Univ. Life Sciences Complex: Syracuse, NY (TT8 x 28)
St Anthony Medical Center: Crown Point, IN (TT4P x 31)
Royal Plaza : Boise, CO (TT6 x 259, TT8 x 69)
Burger Boat Company: Manitowoc, WI (TT4 x 20)
Fortune Properties: Asheville, NC (TT4 x 120)
Mirage Hotel: Las Vegas, NV (TT8 x 64)
Avantel Corp: Mexico City, Mexico (TT8 x 475, TT6 x 19, PK10 x 37, PK8 x 39, PK6 x 13)

Aluminum SpotDiffusers

Lifetime Fitness: Laguna Niguel, CA (PK12 x 2, PK10 x 30, PK8 x 29, PK6 x 16), Reston, VA (PK10 x 42), Bloomfield Hills, MI (PK8 x 3, PK10 x 38, PK12 x 3), Johns Creek, GA (PK10 x 91), Atlanta, GA (PK8 x 6, PK10 x 20, PK12 x 6, PK16 x 4)
Yard House Restaurant: Yonkers, NY (PK12E x 14), Santa Fe Springs, CA (PK12E x 14), Cincinatti, OH (PK10 x 3)
Gold Gym: Rosedale, MD (PK12 x 22), Richmond, VA (PK16RA x 13)
Starbucks: Hayward, CA (PK20 x 6), Atlanta, GA (PK16R x 12, PK10 x 7), Spanish Fork, UT (PK7R x 2), Seattle, WA (PK6 x 5, PK8 x 14)
Garmat USA - Paint Spray Booths: Englewood, CO (PK4E x 950)
Centerline Spray Booths: Amityville, NY (PK4E x 1186)
Tocumen International Airport : Panama City, Panama (PK16 x 23)
Westfield Cinemas at Montgomery Mall: Bethesda, MD(PK20 x 14, BS20 x 14)
Cinepolis Luxury Cinemas: Honduras (PK16 x 24), Panama (PK18 x 32)
Los Andes Mall: Panama (PK16E x 186, PK20E 32)
Gildan Honduras Hosiery Factory - New Plants: Honduras (PK12 x 160)
Shaw park Cultural Centre: Trinidad (PK12E x 32, PK16E 106)
Torrance Memorial Medical Center: Torrance, CA (PK12 x 22)
The Johns Hopkins Hospital: Baltimore, MD (PK20RA x 24)
New Mexico State University: Las Cruces, NM (PK7RA x 61)
Phoenix College - Hannelly Center : Phoenix, AZ (PK8 x 4, PK10 x 6, PK12 x 2, PK16 x 4, PK18 x 5)
El Monte Busway (PK12 x 16): El Monte, CA (PK8 x 32)
The John F. Kennedy Center for the Performing Arts: Washington, DC (PK8 x 32)
Lane Community College - Downtown Campus Housing: Eugene, OR (PK4 x 251)
Canon USA : New York, NY (PKP52-146 x 9)
San Diego International Airport - Terminal 2: San Diego, CA (PK12 x 54, PK8 x 16)
Germain Toyota of Naples Dealership: Naples, FL (PK16 x 58)
The Southeastern Pennsylvania Transportation Authority (SEPTA): Philadelphia, PA (PKP42-126 x 20)
Fremont High School Gymnasium: Fremont, MI (PK12 x 36, PK16 x 100, PK20 x 30)
Belo Center for New Media: Austin, TX (PK12 x 72, PK16 x 18)
First Solar USA: Mesa, AZ (PK16 x 220)
DMG Mori Seiki: Sacramento, CA (PK12 x 112, PK16 x 128, PK18 x 14)
Westminster Swim & Fitness Center: Westminster, CO (PK8 x 110)
The Boulders Climbing Gym: Victoria, B.C., Canada (PK6-3-2710 x 18)

Spot Diffuser with Condensation Control Air Guide

HU Kitchen: NEW York, NY (PK8K x 12)
UniFirst Laundry: San Antonio, TX (PK12K x 13)
H-E-B Ice Cream Plant / Corn Chip Line: San Antonio, TX (PK20K x 4, PK16K x 6, PK20K X 2, PK16K x 1)
Brooklyn Brewery: Brooklyn, NY (PK10K x 22, NX6 x 10)
Lockheed Martin: Orlando, FL (PK12K x 40)
Nephron Pharmaceuticals Corporation: Orlando, FL (PK12WK x 64)
St. Paul's School for Girls: Brooklandville, MD (PK20K x 10)
TD Ameritrade Park: Omaha, NE (PK10K x 17)
Allen Foods: Topeka, KS (PK12K x 57)
Halekulani Hotel Laundry Room: Honolulu, HI (PK16K x 16)
Ravinia Park Performing Arts Facility: Highland Park, IL (PK8K x 16)
Wycliffe Golf & Country Club: Lake Worth, FL(PK10K x 8)
Paramount Pictures (Bungalow): Los Angeles, CA (PK12K x 5)

TurboNozzle Diffusers

Apple Comp. Office Bldgs. - Tantau, Bubb, Bandley, Macara, Data Center: San Jose, CA (NT8, NT12, NT14, NT16, NT20, NT24, BS16, BS20, NTX6R, NTX8R, NTX10R, NTX12R, NTX14R, NTX8, NTX10, NTX12, NTX14, NTX16)
Chipotle Mexican Restaurants: Over 400 locations nationwide (NT, BS, NTX-R, NX)
Jacksonville Airport: Jacksonville, FL (NT10 x 390)
Nike - Administrative Office: New York, NY (NT6 X 2, NT10 X 35, NT14 X 26)
Baltimore Washinton Int'l. Airport - Gate A: Baltimore, MD (NTX8 x 172, NT10 x 12, NTX12 x 60, NT14 x 54, NTX16 x 56, PK12 x 46, PK10 x 2)
Tommy Hilfiger: New York, NY (NT6 X4, NT8 X 11, NT10 X 55, NT12 X 177, NT14 X 13)
JFK Int'l. Airport - American Airlines Concourse "C": Jamaica, NY (NT6-4P X 10, NT10-2P X 10, NT14-4P X 4, NT12-4P X 8, NT14-2P X 4, NT10P X 20)
World Trade Center Transportation Hub: New York, NY(NT8 x 80, NT14 x 80)
The Qualcomm, Inc.: San Diego, CA (NTX16 x 12, NTX20 x 25)
Oregon Museum of Science & Industry (OMSI): Portland, OR (NT24 x 16)
Sri Lanka Temple Tree - Conference Hall: Sri Lanka (NT14 x 120)
Hillside Shopping Centre: Victoria, B.C. Canada (NT14 x 46, NTX16 x 34, NT10-3P x 9)
SeaWorld's 4D Theater: San Diego, CA (NTX12R x 20)
Iowa State Fair Cultural Center: Des Moines, IA (NTX12 x 72, NTX14 x 39)
Nissan Plant: Canton, MS / Smyrna, TN (NTX20 x 124, BS20 X 124, NTX8R x 40, NTX10R x 158)
The UA's Laboratory of Tree-Ring Research : Tucson, AZ (NT8 x 16, NT8P x 32)
Gulf Quest National Maritime Museum of the Gulf of Mexico: Mobile, AL (NT12 x 47)
Univ. of Michigan - Crisler Arena: Duluth, MN (NTX14R x 14)
Duluth International Airport: Ann Arbor, MI (NTX14R x 14)
Central Connecticut State University - Seth Residence Hall: New Britain, CT (NT4 x 68)
Central Arizona College - Superstition Mountain Campus: Apache Junction, AZ (NTX8 x4,NT12 x 37, NTX8R x 4, NTX10R x 13, NTX8 x 4, NTX10 x 13)
City Mall Honduras : Tegucigalpa, Honduras (NT8 X 299, NTX20R x 132, NTX24R x 24)
Old Dutch Foods - Potato Chips Plant: New Brunswick, Canada (NTX8R x 18, NTX10R x 72, NTX12R x 20)
Daniel Oduber Quiros International Airport: Liberia, Costa Rica (NT12 x 62, BS12 x 62)
John Thomas Dye School: Los Angeles, CA (NTX10 x 44)
National Rehabilitation Hospital: Washington, DC (NTX4 x 11, NTX8R x 27)
Crowne Plaza Hotel: Charleston, SC (NT4 x 320)
Men's Wearhouse: Altamonte Springs, FL (NT8P x 24)
BWI Airport - Southwest Terminal: Baltimore, MD (NT14-2P x 29, NT6 x 65, NT8 x 10)
National Personnel Records Center - NARA: St. Louis, MO (NTX8R x 628, NTX10R x 90, NTX12R x 27)
Providenciales Int'l. Airport: Turks & Caicos Islands (NT14 x 32, BS14 x 32, PKP84-2020 x 8)
Natural History Museum of Los Angeles County: Los Angeles, CA (NT10-2P X 4, NT10-3P X 7)
Qatar National Convention Center: Qatar, U.A.E. (NT12 x 23, NT16 x 58, NT20 x 67, NT24 x 16, NP10 x 24
Delaware State Univ. - Student Center: Dover, DE (NT10 X 31, NTX16R X 43, NTX4R X 1)
United Therapeutics Corp.: Silver Spring, MD (NTX6R X 89, NTX8R X 20, NTX12 X 2)
Amada America, Inc.: Schaumburg, IL (NTX6R X 89, NTX8R X 20, NTX12 X 2)
San Francisco Marriott Hotel: San Francisco, CA (NT14 x 76)
Blum & Poe Art Gallery: Los Angeles, CA (NT8 x 24, NT10 x 28, NT12 x 4,)
Raleigh Durham International Airport: Raleigh-Durham, NC (NT16 x 480, NT12 x 12)
Lutheran Church of Saint Andrew: Silver Springs, MD (NTX10 x 49)
UVSC Digital Learning Center: West Valley City, UT (NTX6 x 222, NTX8 x 106, NTX10 x 16)




Reversible TurboNozzles

Penn State Univ. - Reed Union Bldg.: Erie, PA (NX6 x 15, NX8 x 34)
Sierra Pacific Constructors Office: Woodland Hills, CA (NX8, NX10, NX12, NX14)
Univ. of Alaska Anchorage Sports Arena: Anchorage, AK (NX16-2P x 10)
Children First Academy: Phoenix, AZ (NX10 x 18, NX12 x 4, NX14 x 17, NX16 x 3)
Merck Warehouse: Durham, NC (NX10-2P x 67, NX16-2P x 3, NX14-2P x 2)
Stepping Stones Museum For Children: Norwalk, CT (NX6 X 30, NX8 X 12, NX10 X 12)
Farmshop Restaurant: Larkspur, CA (NX10 x 6, BS10 x 6, NX12 x 6, BS12 x 6)
Univ. of South Carolina School of Medicine: Greenville, SC (NX8 x 24, NX12 x 12)
JCI - Johnson Controls Mega Block: San Antonio, TX (NX12 X 56)
The Advisory Board Company: Austin, TX (NX8 x 22,NX10 x 252)
Southgate Volkswagen / Norden Autohaus Volkswagen: Edmonton Alberta, Canada (NX12 x 12, NX14 x 24, NX8 x 6, NTX8 x 6, NTX12 x 6)
Maple Leaf Gardens: Toronto Ontario, Canada (NX8 x 140, PK12 x 5)

Round Grilles & Dampers

Oxygen Media 30 Rockefeller Plaza: New York, NY (RHV8 x 117, BS8 x 117)
Campbell Sports Center: New York, NY (RHV6 x 26, RHV8 x 60, RHV10 x 23, RHV12 x 15, RHV14 x 5)
Hyper Marketing, Inc.: Chicago, IL (NR8B x 28, NR12B x 4, PK12E x 19)
Univ. of Maryland Baltimore County - New Theatre: Baltimore, MD (NR16B x 12)
Yale University - Art Gallery: New Haven, CT (RHV8 x 16, RHV10 x 5, RHV14 x 10,RHV16 x 4, NR14B x 10)
Bismarck State University : Bismarck, ND (RHV8 x 50, RHV10 x 17, BS8 x 50, BS10 x 17)
Lincoln Acres Library : National City, CA (RHV10 x 22)
Ambassador Hotel : Kansas City, MO (RHV12 x 14, BS12 x 14)
Taylor University - Science Center: Upland, IN (RHV12 x 35)
Clyde's DC Restaurant - The Hamilton: Washington, DC (NR14B x 37)
Bishop International Airport: Flint, MI (RHV10 x 24, RHV14 x 6)
Phoenix Sky Harbor International Airport - Sky Train Transport System: Phoenix, AZ (RHV8 x 114, RHV10 x 38)
Univ. of Texas, Arlington - Special Events Center: Arlington, TX (RHV16 x 61, RHV24 x 40, BS16 x 61)
Marlins BallPark: Miami, FL (NR14B x 6, NR16B x 9, NR24B x 45)
Iowa State University College of Veterinary Medicine: Ames, IA (RHV12 x 13, BS12 x 13)
Chesapeake Childcare Center: Oklahoma City, OK (EC8N x 96)
Children's Institute: Los Angeles, CA (RHV12 x 15, RHV16 x 12, RHV20 x 2)
New Bedford Whaling Museum: New Bedford, MA (NR8B x 64, NR10B x 12)
Arkansas State Univ. - The Vada Sheid Comm. Development Center: Mountain Home, AR (RHV16 x 30)
Eventi Hotel: New York, NY (RHV8 x 132, BS8 x 132)
Orange County Flood Control District Yard: Orange, CA (RHV16 x 6, RHV14 x 10, RHV12 x 5)
Las Vegas Regional Transportation Commission: Las Vegas, NV (NR6B, NR10B, NR24B)
Armed Force Reserve Center: Houston, TX (RHV6 x 51)
Churchwell Lofts: Orange Park, FL (RHV6 x 106, RHV8 x 60, RHV10 x 14, RHV14 x 12, RCC4 x 6, RCC6 x 6)
Endeavor Talent Agency: Beverly Hills, CA (RHV10)
East Valley Bible Church: Gilbert, AZ (RHV12 x 4, RHV16 x 15, BS12 x 4, BS16 x 15)
Concert Hall at Nevada University of LV: Las Vegas, NV (RHV14 x 4, RHV20 x 38)
Toy Factory Lofts: Los Angeles, CA (NR12B)
Branson Landing Convention Center: Branson, MO (RHV16 x 58)
University of Northern Iowa: Cedar Falls, IA (RHV10 x 52, RHV14 x 69, BS10 x 52, BS14 x 4)
D.S.M.O. Law Offices: Washington D.C. (RHV10 x 106, RHV6 x 24)
O'Higgins Indoor Sports Studium: Santiago, Chile (RHV24 x 60)
Mississippi Grand Opera House - MSU Riley Center: Meridian, MS (RHV14 x 8, RHV20 x 14)

Volume Adjustable Grilles

Kenai Peninsula College - Student Housing: Soldotna, AK (JRC4 x 215)
Ritz Carlton Hotel & Resort: Grand Cayman, Caribbean (JRC4 x 320)
ASPCA Animal Center: Boylston, MA (JRA4 x 24),New York, NY (JRA4 x 112, DK3M3 x 70, DK4M3 x 65)
Animal Resucue League of Boston Stafford Shelter : Boston, MA (JRA4 x 26)
Citizen M Hotel - Times Square: New York, NY (JRA4 x 230)
The LUX Apartments: Wichita, KS (DK6M x 80)
Courtyard Marriott at Briarcliff : Kansas City, MO (JRA4 x 121)
Hard Rock Marble & Granite: Roselle, NJ (DK4M3 x 210)
CVC Distribution Center: Waverly, NY (DK6M x 1159)
Embassy Suites Orlando - Downtown: Orlando, FL (DK4M3 x 160)
Comfort Inn: Glastonbury, CT (JRA4 x 64)

Vent Caps

Blvd 6200: Hollywood, CA (KX5N x 450, KX6N x 30)
SLS Hotel & Casino: Las Vegas, NV (KX4N x 360, KX5N x 10, KX6N x 42)
The Homes at Old Colony: South Boston, MA (SFX6N x 242, SFZC6 x 36, SFX6 x 2)
Farmers Park Apartments: Springfield, MO (KX4N x 58, SX7N x 58)
Microtel Inn and Suites: Blackfalds, Alberta, CANADA (SX6N x 107, SX8N x 15)
TownePlace Suites by Marriott : Richland, WA(KX4N x 20, KX6N x 24)
Homewood Suites by Hilton: Dallas, TX (SX4N x 153)
Broadstone Lincoln Apartments: Scottsdale, AZ (SFX6 x 12, SFX7 x 12, SFZ4 x 12, SFZC4 x 12)
Broadstone Camelback Apartments: Phoenix, AZ (SX3N x 18, SX4N x 180, SX6N x 26, SX8N x 1)
The Balke at Flowood Senior Living: Flowood, MS (SFX4N x 129, SX4N x 84, SX6N x 2)
Longwood University Student Housing at Lancer Park: Farmville, VA (SFX4 x 178, SFX6 x 133)
Cypress Gardens Active Senior Living: Houston, TX (SFX5N x 140, SFX6 x 8, SFX8 x 8, SFX4 x 13)
Cinema Court Housing: Moab, UT (SX4 x 129, SX7 x 60)
Arizona State University, Polytechnic Campus: Mesa, AZ (SX4N x 140)
Castle Square Apartments: Boston, MA (SX4 x 192, KX6N x 616)
South Hills Retirement Residence: Pittsburgh, PA (SX8 x 204)
Vi Living : Highlands Ranch, CO (SX6 x 250, SX6N x 500, SX8N x 22)
Willows Condominiums: Vail, CO (SX7 x 24, SX8 x 10, SXL12 x 6, SXL14 x 17, etc.)
Westend Lofts: Marina del Rey, CA (SFX4 x 240, SFZC4 x 120)
Ferris State Univ., East Campus Housing: Big Rapids, MI (SX6N x 170)
Boston Housing Authority: Charlestown, MA (SFX3N x 150, SFX4 x 210, SFX4N x 698, SFB4 x 810)
Eklutna Estates Community Wellness Center: Anchorage, AK (SFX4 x 140, SFX8 x 60)
The Shore Condominiums: Austin, TX (SX6 x 392)
Sawtooth Cactus Petes Resort Casino: Jackpot, NV (SX4 x 222, SFX4N x 222)
Beach Colony Resort Condominiums: Narrarre Beach, FL (SFX4 x 229)
Century Plaza Residences: Phoenix , AZ (SFZC6 x 150, SXL12 x 243)

Dryer Vents

The Village at Santa Monica: Santa Monica, CA (SB6 x 91, SX6 x 286)
LUXE Sunset Boulevard Hotel : Los Angeles, CA (SFB6 x 60, SFX6N x 79)
Skyhouse Buckhead Apartments: Atlanta, GA (SFB4 x 665)
Laurel Apartments: Nashville, TN (SB x 638, SB4 x 318)
Solace Apartments: Norfolk, VA (SFZC4 x 250, SFX4N x 357, SX6N x 250, SXL10N x 10)
Fair Lakes Apartments: Fairfax, VA (SFZC6 x 298, SFZ6 x 18)
Fenwick Station Apartments: Silver Spring, MD (SFZC4 x 733, SFZC6 x 310, SFZ6 x 88, CD6S x 88)
Gallery Bethesda: Bethesda, MD (SFZC4 x 331,SFZC6 x 239)
Orchard Ridge Apartments: Baltimore, MD(SB4 x 788, SB x 120)
West Square Apartments: South Boston, MA (SFZC4 x 355)
Union Wharf Apartments: Baltimore, MD (SFB4 x 209, SFB6 x 95)
Mallard Crossing Apartments: Baton Rouge, LA (SFB4 x 130, SFZ4 x 223)
AVA Apartments: Washington, DC (SFB4 x 340)
The Broadway Lofts : San Antonio, TX (SB4 x 351, SFB4 x 368)
BLVD|Loudoun Station Apartments : Ashburn, VA (SFZ4 X 452, SFB4 X 397)
Greenwich Village Apartments : Virginia Beach, VA (RCC4S 340, RCA4S x 224)
Halstead Square Apartments: Vienna, VA (SFZC4 x 608)
Avalon Park Crest Apartments: Tysons Corner, VA (RCC4S x 650)
Raduis Urban Apartments: Newport News, VA (RCC4S x 595)
The Moderne Condominiums: Milwaukee, WI (SFZC4 x 519)
Floral Gardens Senior Apartments: Houston, TX (SFZC4 x 110, SFZ4 x 200, SFZC6 x 5)
Princeton Theological Seminary West Windsor Campus Student Housing: Princeton, NJ (SFZC6 x 650, SFZ6 x 240, SFB6 x 205, SX6 x 25)
Montereau Senior Retirement Community: Tulsa, OK (SFZC6 x 27, SFB6 x 37)
The Sheridan Station Apts.: Washington, DC(SFZC6 x 90)
The Shore Condominiums: Austin, TX (SFB6 x 200)
North Beach Towers Condominiums: North Myrtle Beach, SC (SFZC4 x 315, SFZC6 x 297)
Halstead Apartments: Arlington, VA (SFZC4 x 265)
The North End Apts. & Condominiums: Milwaukee, WI (SFZC4 x 187, SFZC6 x 84)
Isola Bella Condominiums: South Padre Island, TX (RCA4S x 59, RCC6S x 90)
Corcoran Lofts: Milwaukee, WI (SFZC6 x 82, SFZC4 x 171, SFX6N x 18, SFX8 x 2)
Grand Harbor Condominiums & Marina: Pickwick, TN (SB4 x 119, SFX7 x 107)
1600 Vine at Hollywood & Vine: Los Angeles, CA (SFZ6 x 375, SFZC6 x 685)

Product Index

RESIDENTIAL CEILING MINI DIFFUSERS

Model: **TT**

Residential Ceiling MINI Diffuser

FEATURES
- Adjustable Volume Control
- Low Diffusion Air Patterns
- Low Silhouette, Unobtrusive Profile

SIZES
- 4", 6", 8"

MATERIAL
- Aluminum

Model: **TT-P**

Residential MINI Diffuser Panel

FEATURES
- Adjustable Volume Control
- Low Diffusion Air Patterns
- Uses Standard Ducts

SIZES
- 8"x8", 12"x12", 14"x14"

MATERIAL
- Aluminum

Model: **TX**

Residential MINI Diffuser
for Horizontal and Vertical Air Flow

FEATURES
- Vertical & Horizontal Throw
- Easy Operation
- Adjustable Volume Control

SIZES
- 4", 6", 8"

MATERIAL
- Aluminum

Model: **TX-P**

Residential MINI Diffuser Panel
for Horizontal and Vertical Air Flow

FEATURES
- Vertical & Horizontal Throw
- Easy Operation
- Adjustable Volume Control

SIZES
- 8"x8", 12"x12", 14"x14"

MATERIAL
- Aluminum

ALUMINUM SPOTDIFFUSERS

Model: **PK**

Aluminum SpotDiffuser

FEATURES
- Spot Cooling/Heating Application
- Adjustable Direction
- Adjustable Volume Control

SIZES
- 3" to 20"

MATERIAL
- Aluminum

Model: **PK-E**
(without Damper)

Aluminum SpotDiffuser

FEATURES
- Spot Cooling/Heating Application
- Adjustable Direction
- Long Air Throws

SIZES
- 3" to 20"

MATERIAL
- Aluminum

Model: **PKP**

SpotPac

FEATURES
- Available up to 4 PKs per Panel
- Individually Adjustable SpotDiffusers
- Uses Standard Ducts

SIZES
- 12"x6" to 22"x22"

MATERIAL
- SpotDiffuser-Aluminum
- SpotPac Plate-Stainless Steel

Model: **PK-AD**
(with Damper)

Air Shower Nozzle (for Clean Room)

FEATURES
- Specifically Designed for Air Shower Application
- Anodized Aluminum Construction for Corrosion Protection

SIZES
- 3" & 4"

MATERIAL
- Aluminum

ALUMINUM SPOTDIFFUSERS

Model: **PK-A**
(without Damper)

Air Shower Nozzle (for Clean Room)

FEATURES
- Specifically Designed for Air Shower Application
- Anodized Aluminum Construction for Corrosion Protection

SIZES
- 3" & 4"

MATERIAL
- Aluminum

Model: **PK-R**
(Exposed Duct Mounted)

SpotDiffuser with Round Duct Adapter

FEATURES
- Duct Size=Refer to Submittal
- Exposed Duct Mounted (Duct Flanges not Required)

SIZES
- 6" to 20"

MATERIAL
- Aluminum

Model: **PK-RA**
(Wall/Spiral Duct Mounted)

SpotDiffuser with Round Duct Adapter

FEATURES
- Duct Size=PK-RA Size
- Exposed Duct/Surface Mounted (Duct Flanges not Required)

SIZES
- 6" to 20"

MATERIAL
- Aluminum

Model: **PK-K**

SpotDiffuser with
Condensation Control Air Guide

FEATURES
- Air Guide Leads Air to Diffuser' s Outer Surface Helping to Reduce Condensation
- Excellent for Application in High Humidity Environment

SIZES
- 8", 10", 12", 12"WIDE, 16", 20"

MATERIAL
- SpotDiffuser-Aluminum
- Air Guide-ABS Resin

Product Index

TURBONOZZLES

Model: **NT**

Aluminum TurboNozzle

FEATURES
- Long Air Throws
- Adjustable Air Direction
- Easy Installation

SIZES
- 4" to 24"

MATERIAL
- Aluminum

Model: **NP**

Aluminum TurboNozzle

FEATURES
- Long Air Throws
- High Airflow Capacity
- Easy Installation

SIZES
- 4" to 24"

MATERIAL
- Aluminum

Model: **NT-P**

TurboNozzle Panel

FEATURES
- Available up to 4 NTs per Panel
- Individually Adjustable TurboNozzle
- Uses Standard Ducts

SIZES
- 7.5"x7.5" to 84"x21"

MATERIAL
- TurboNozzle-Aluminum
- Plate-Stainless Steel

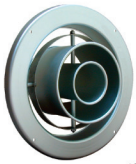

Model: **NTX**
(Surface Mounted)

Aluminum TurboNozzle

FEATURES
- Surface Mounted
- Adjustable Air Direction
- Easy Installation

SIZES
- 4" to 24"

MATERIAL
- Aluminum

TURBONOZZLES

Model: **NTX-R**
(Exposed Duct Mounted)

Aluminum TurboNozzle

FEATURES
- Exposed Duct Mounted
- Adjustable Air Direction
- Easy Installation

SIZES
- 4" to 24"

MATERIAL
- Aluminum

Model: **NX**

Aluminum Reversible TurboNozzle

FEATURES
- Reversible Center Cones for Narrow or Wide Jet Air Pattern
- Adjustable Air Direction

SIZES
- 6" to 16"

MATERIAL
- Aluminum

Model: **NX-P**

Reversible TurboNozzle Panel

FEATURES
- Available up to 4 NXs per Panel
- Reversible Center Cones for Narrow or Wide Jet Air Pattern

SIZES
- 9.5"x9.5" to 84"x21"

MATERIAL
- TurboNozzle-Aluminum
- Plate-Stainless Steel

ROUND GRILLES & DAMPERS

Model: **RHV**

Double Deflection Round Grille

FEATURES
- Double Deflection
- Concealed Mounting Mechanism
- Contemporary Design

SIZES
- 6" to 24"

MATERIAL
- Aluminum

Model: **NR-B**

Double Deflection Round Grille

FEATURES
- Wide Extruded Airfoil Blades
- Linked Airfoil Blades
- Contemporary Design

SIZES
- 6" to 24"

MATERIAL
- Aluminum

Model: **EC**

Round Lattice Grille

FEATURES
- Return/Fresh Air Intake
- High Free Area
- Optional Insect Screen (EC-N)

SIZES
- 8", 10", 12"

MATERIAL
- Aluminum

Model: **BS**

Butterfly Damper

FEATURES
- Multiple Blades
- High Capacity
- All Steel Construction

SIZES
- 6" to 24"

MATERIAL
- Heavy Gauge Steel

Product Index

VOLUME ADJUSTABLE GRILLES

Model:**JRC**
Adjustable Aluminum Grille

FEATURES
- Fresh Air Intake/Exhaust Outlet
- Adjustable Core for Volume Control
- For Interior and Exterior Installation

SIZES
- 4" & 6"

MATERIAL
- Aluminum

Model:**JRA**
Adjustable Plastic Grille

FEATURES
- Fresh Air Intake/Exhaust Outlet
- Adjustable Core for Volume Control
- Competitively Priced

SIZES
- 4" & 6"

MATERIAL
- ABS Resin

Model:**DK-M**
(with Butterfly Damper)
Adjustable Plastic Grille

FEATURES
- Fresh Air Intake/Exhaust Outlet
- Standard with Butterfly Damper
- Competitively Priced

SIZES
- 3", 4", 6"

MATERIAL
- ABS Resin

Model:**DK-M3**
(with Slide Damper)
Adjustable Plastic Grille

FEATURES
- Fresh Air Intake/Exhaust Outlet
- Standard with Slide Damper
- Competitively Priced

SIZES
- 3", 4", 6"

MATERIAL
- ABS Resin

VOLUME ADJUSTABLE GRILLES

NEW

Model:**JSP**
Adjustable Plastic Grille

FEATURES
- Fresh Air Intake/Exhaust Outlet
- Adjustable Volume Control by Pressing Face Plate

SIZES
- 4" & 6"

MATERIAL
- ABS Resin

VENT CAPS

NEW

Model:**SX-S**
Stainless Steel Vent Cap

FEATURES
- Fresh Air Intake/Exhaust Outlet
- For Interior and Exterior Installation
- Optional Insect Screen (SX-SN)

SIZES
- 4" & 6"

MATERIAL
- Stainless Steel

NEW

Model:**SFX-S**
Stainless Steel Vent Cap

FEATURES
- Fresh Air Intake/Exhaust Outlet
- For Interior and Exterior Installation
- Optional Insect Screen (SFX-SN)

SIZES
- 4" & 6"

MATERIAL
- Stainless Steel

NEW

Model:**KX**
Aluminum Steel Vent Cap

FEATURES
- Fresh Air Intake/Exhaust Outlet
- For Interior and Exterior Installation
- Optional Insect Screen (KX-N)

SIZES
- 3", 4", 5", 6"

MATERIAL
- Aluminum

VENT CAPS

Model:**SX**
Aluminum Vent Cap

FEATURES
- Fresh Air Intake/Exhaust Outlet
- For Interior and Exterior Installation
- Optional Insect Screen (SX-N)

SIZES
- 3" to 8"

MATERIAL
- Aluminum

Model:**SFX**
Aluminum Vent Cap

FEATURES
- Fresh Air Intake/Exhaust Outlet
- For Interior and Exterior Installation
- Optional Insect Screen (SFX-N)

SIZES
- 3" to 12"

MATERIAL
- Aluminum

Model:**SXL**
Aluminum Vent Cap

FEATURES
- Fresh Air Intake/Exhaust Outlet
- High Capacity
- Optional Insect Screen (SXL-N)

SIZES
- 10", 12", 14", 16"

MATERIAL
- Aluminum

Product Index

DRYER VENTS

NEW

Model: **SB-P**
Aluminum Dryer Vent

FEATURES
- With Heavy Duty Aluminum Pipe
- Standard with Flapper Damper
- Large Free Area Reduces Clogging

SIZES
- 4" & 6"

MATERIAL
- Aluminum

NEW

Model: **SFB-P**
Aluminum Dryer Vent

FEATURES
- With Heavy Duty Aluminum Pipe
- Standard with Flapper Damper
- Large Free Area Reduces Clogging

SIZES
- 4" & 6"

MATERIAL
- Aluminum

Model: **SB**
Aluminum Dryer Vent

FEATURES
- Standard with Flapper Damper
- Large Free Area Reduces Clogging
- All Aluminum Construction

SIZES
- 4" & 6"

MATERIAL
- Aluminum

Model: **SFB**
Aluminum Dryer Vent

FEATURES
- Standard with Flapper Damper
- Large Free Area Reduces Clogging
- All Aluminum Construction

SIZES
- 4" & 6"

MATERIAL
- Aluminum

DRYER VENTS

Model: **SFZ**
Aluminum Dryer Vent

FEATURES
- Large Vents Reduces Clogging
- All Aluminum Construction
- Uses Standard Ducts

SIZES
- 4" & 6"

MATERIAL
- Aluminum

Model: **SFZC**
(with Backdraft Damper)
Aluminum Dryer Vent

FEATURES
- Standard with Backdraft Damper
- Large Vents Reduces Clogging
- All Aluminum Construction

SIZES
- 4" & 6"

MATERIAL
- Aluminum

Model: **RCA-S**
Stainless Steel Dryer Vent

FEATURES
- Large Vents Reduces Clogging
- Made from 304 Stainless Steel
- Easy Installation

SIZES
- 4" & 6"

MATERIAL
- Stainless Steel

Model: **RCC-S**
(with Backdraft Damper)
Stainless Steel Dryer Vent

FEATURES
- Standard with Backdraft Damper
- Large Vents Reduces Clogging
- Made from 304 Stainless Steel

SIZES
- 4" & 6"

MATERIAL
- Stainless Steel

Residential Ceiling MINI Diffusers

Model: **TT & TT-P**

Model: **TT**

Model: **TT-P**
Ceiling MINI Diffuser Panel

MATERIAL
- Aluminum

FINISH
- White Painted or Clear Anodized
- Custom Colors Available

The Model TT and TT-P offer excellent architectural styling for low volume supply and exhaust applications. The diffuser has an aerodynamically profiled, adjustable center plate which is designed to provide an easy method of flow regulation. The standard white or clear anodized finish.

FEATURES

- Available for Standard Duct Sizes
- Positive Sealing Core-to Body Mount
- Low Silhouette, Unobtrusive Profile
- Adjustable Core for Volume Control
- 360° Horizontal Diffusion Air Pattern
- Knurled Air Flow Adjustment Knob

APPLICATIONS

- Homes
- Condominiums
- Restaurants
- Apartments
- Hotels
- Ships
- Offices
- Retail Stores

MODEL TT DIMENSIONS

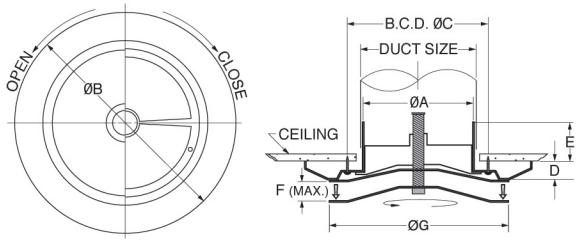

MODEL	DUCT SIZE	A	B	C	D	E	F	G
TT 4	4	3 3/4	7 3/4	4 27/32	5/8	1 17/32	1 5/8	6 3/16
TT 6	6	5 27/32	11	7	7/8	1 29/32	1 5/8	8 31/32
TT 8	8	7 11/16	13 1/4	9 3/16	7/8	1 9/16	1 7/8	11 1/4

Product information is subject to change without notice. All dimensions in inches.

MODEL TT-P DIMENSIONS

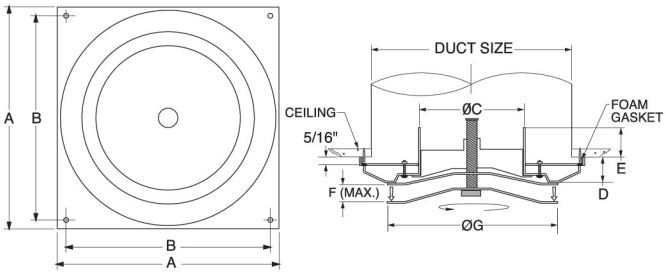

MODEL	DUCTSIZE SQUARE W x H	DUCTSIZE ROUND(Ø) INCHES	A	B	C	D	E	F	G
TT 4P	6x6	4	8	7	3 3/4	15/16	1 17/32	1 5/8	6 3/16
TT 6P	10x10	6	12	11	5 27/32	1 3/16	1 19/32	1 5/8	8 31/32
TT 8P	12x12	8	14	13	7 11/16	1 3/16	1 1/4	1 7/8	11 1/4

Product information is subject to change without notice. All dimensions in inches.

MODEL TT/TT-P PERFORMANCE DATA

SIZE	Neck Area	Neck Velocity (fpm)	400	500	600	700	800	900	1000	1200	1400
4	0.080 sq.ft.	Air Flow (CFM)	31	39	47	55	63	71	78	94	110
		SP(in., wg)	0.014	0.024	0.034	0.047	0.063	0.079	0.098	0.142	0.197
		Throw (vt=@100fpm)	1.3	1.6	2.0	2.3	2.6	3.0	3.3	3.6	4.3
		Throw (vt=@50fpm)	2.3	2.6	3.3	3.6	4.3	4.6	5.2	6.2	7.2
		NC	-	-	-	-	-	-	18.5	24	28.5
6	0.183 sq.ft.	Air Flow (CFM)	72	90	108	126	144	162	180	216	252
		SP(in., wg)	0.020	0.033	0.047	0.063	0.083	0.102	0.126	0.177	0.240
		Throw (vt=@100fpm)	2.3	3.0	3.3	3.6	4.3	4.6	4.9	5.9	6.9
		Throw (vt=@50fpm)	3.9	4.6	5.2	5.9	6.6	7.2	7.9	9.2	10.5
		NC	-	-	-	-	-	-	20	25.5	31
8	0.328 sq.ft.	Air Flow (CFM)	129	162	194	227	259	291	324	388	453
		SP(in., wg)	0.028	0.043	0.063	0.087	0.114	0.142	0.177	0.260	0.354
		Throw (vt=@100fpm)	3.6	4.6	5.2	6.2	6.9	7.9	8.5	10.2	11.8
		Throw (vt=@50fpm)	6.6	7.9	8.9	10.2	11.2	12.5	13.4	15.4	17.7
		NC	-	-	-	-	-	17.5	21.5	26.5	32.0

DASHED LINE IN NC BOX INDICATES NOISE LEVEL IS LESS THAN 17.
NC LEVEL IS BASED ON 10dB ROOM ATXENUATION(PWL RE:10-12 WATXS) WITH ONE DIFFUSER OPERATING.

Model: **TX**

Model: **TX-P**
Ceiling MINI Diffuser Panel

The MINI Ceiling Diffuser is equipped with an innovative vertical air discharge shutter. Combined with horizontal air flow control center plate, the model TX allows the user to achieve variable air flow patterns. Stylish low silhouette, unobtrusive profile with high quality aluminum construction, make the versatile TX and TX-P MINI Diffusers an excellent choice for many residential or light commercial applications.

MATERIAL	FINISH
• Aluminum	• White Painted or Clear Anodized • Custom Colors Available

VARIABLE AIR FLOW PATTERN

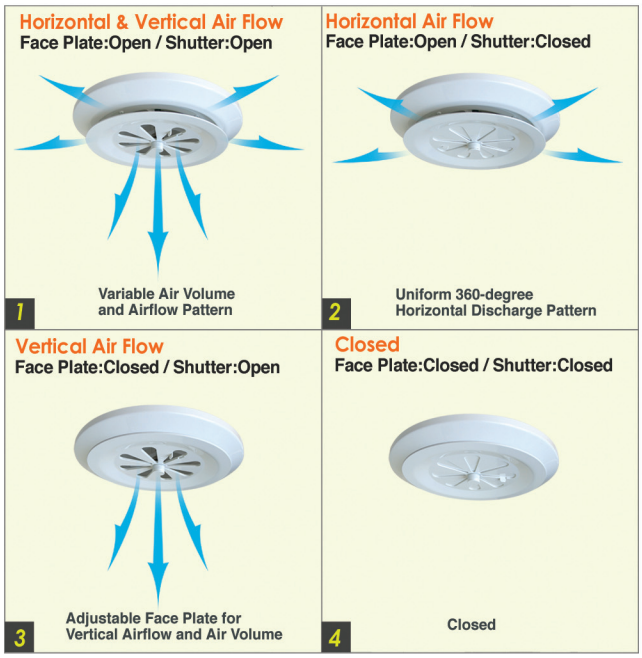

■Adjustable Vertical Air Flow Exit Shutter

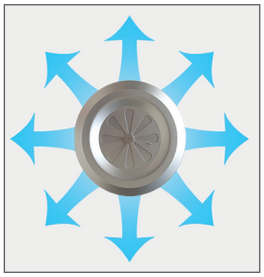

■360° Horizontal Diffusion Air Pattern

■Vertical Shutter Control Knob

■Low Silhouette, Unobtrusive Profile

■Available for Standard Duct Sizes

Residential Ceiling MINI Diffusers
for Horizontal and Vertical Air Flow

Model: **TX & TX-P**

APPLICATIONS

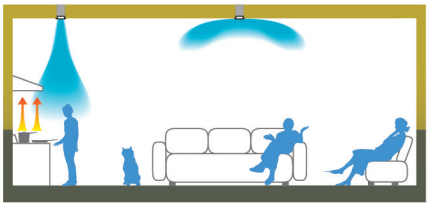
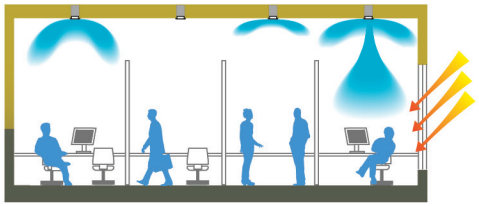
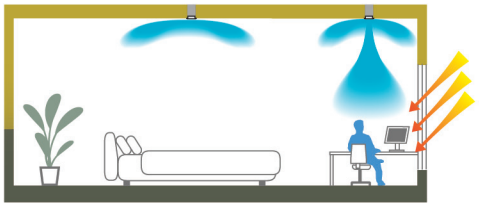

The model TX MINI Diffuser is an ideal product for residential HVAC solution, however, because of its versatility, the TX will also fit perfectly for many other applications such as hospitals, hotels, schools, offices, retail stores and etc.

FINISH

The Seiho TX MINI Diffusers can be custom color matched to enhance the total decor of your room. Can match almost any color sample provided. Please contact our sales department for assistance and detailed ordering information.


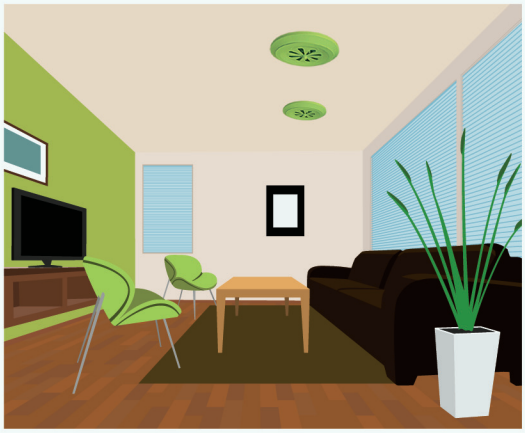

MODEL TX SMOKE PATTERN TEST


■Vertical Air Flow


■Horizontal Air Flow


■Vertical and Horizontal Air Flow

MODEL TX DIMENSIONS

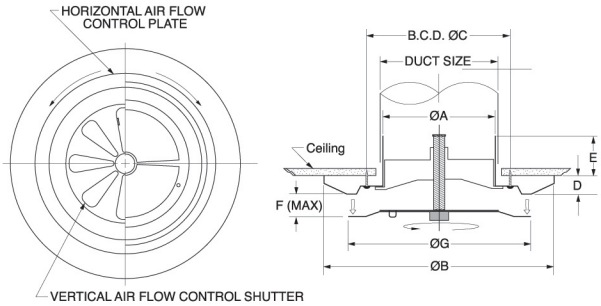

MODEL	DUCT SIZE	A	B	C	D	E	F	G
TX 4	4	3 3/4	7 3/4	4 27/32	5/8	1 17/32	1 5/8	6 3/16
TX 6	6	5 27/32	11	7	7/8	1 29/32	1 5/8	8 31/32
TX 8	8	7 11/16	13 1/4	9 3/16	7/8	1 9/16	1 7/8	11 1/4

Product information is subject to change without notice. All dimensions in inches.

MODEL TX-P DIMENSIONS

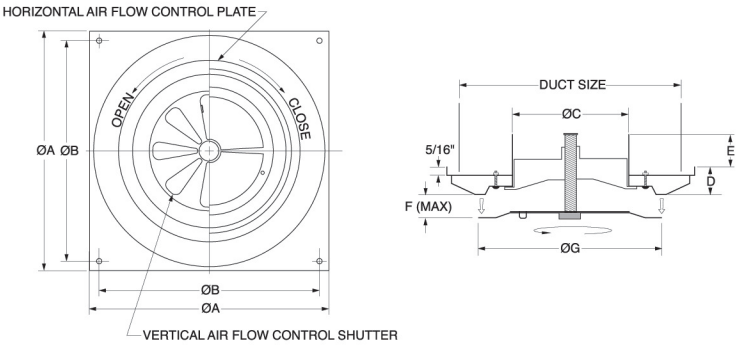

MODEL	DUCTSIZE SQUARE W x H	DUCTSIZE ROUND(Ø) INCHES	A	B	C	D	E	F	G
TX 4P	6x6	4	8	7	3 3/4	15/16	1 17/32	1 5/8	6 3/16
TX 6P	10x10	6	12	11	5 27/32	1 3/16	1 19/32	1 5/8	8 31/32
TX 8P	12x12	8	14	13	7 11/16	1 3/16	1 1/4	1 7/8	11 1/4

Product information is subject to change without notice. All dimensions in inches.

Residential Ceiling MINI Diffuser
Performance Data

Model: **TX & TX-P**

SEIHO
www.seiho.com

SIZE	Neck Area	Air Pattern	Face Plate	V.Shutter	Neck Velocity (fpm)	200	300	400	500	600	700	800	900	1000	1200
					Airflow (CFM)	16	24	31	39	47	55	63	71	78	94
4	0.080 sq.ft.	Combination Air Pattern	Fully Opened	Fully Opened	SP(in., wg)	0.004	0.007	0.011	0.017	0.025	0.035	0.05	0.064	0.081	0.122
					Radius of Diffusion(Vt=@100fpm)	0.3	0.5	0.8	1.0	1.2	1.5	1.6	1.8	2.0	2.3
					Radius of Diffusion(Vt=@50fpm)	0.7	1.0	1.3	1.6	2.0	2.5	2.6	3.0	3.3	3.9
					Throw (Vt.=@100fpm)	1.2	1.6	2.1	2.6	3.1	3.6	4.3	4.6	4.9	5.9
					Throw (Vt.=@50fpm)	2.0	3.0	3.9	4.6	5.6	6.2	7.5	8.2	8.9	10.5
					NC	-	-	-	-	-	-	16	20	23	29
		Combination Air Pattern	A Half Way Opened	Fully Opened	SP(in., wg)	0.005	0.008	0.015	0.026	0.039	0.056	0.078	0.1	0.124	1.178
					Radius of Diffusion(Vt=@100fpm)	0.3	0.5	0.7	0.8	1.0	1.3	1.5	1.6	1.8	2.1
					Radius of Diffusion(Vt=@50fpm)	0.7	2.0	1.2	1.3	1.6	2.0	2.5	2.6	3.0	3.6
					Throw (Vt.=@100fpm)	1.8	2.6	3.3	4.3	4.9	5.6	6.2	6.9	7.5	9.2
					Throw (Vt.=@50fpm)	3.3	4.6	5.9	7.2	8.5	9.8	11.2	12.1	13.5	16.4
					NC	-	-	-	-	-	16	21	24	28	33
		Radial Air Pattern	Fully Opened	Closed	SP(in., wg)	0.006	0.011	0.019	0.030	0.042	0.057	0.077	0.098	0.12	0.178
					Radius of Diffusion(Vt=@100fpm)	0.6	0.7	1.0	1.3	1.5	1.8	2.1	2.3	2.6	3.3
					Radius of Diffusion(Vt=@50fpm)	1.0	1.2	1.6	2.0	2.5	3.0	3.6	3.9	4.3	5.3
					NC	-	-	-	-	-	-	15	19	22	29
		Vertical Air Pattern	Closed	Fully Opened	SP(in., wg)	0.037	0.086	0.154	0.242	0.35	0.468	0.616	0.768	0.932	1.32
					Throw (Vt.=@100fpm)	5.9	8.2	9.8	11.8	13.8	15.4	17.1	18.4	20.7	23.6
					Throw (Vt.=@50fpm)	10.5	14.4	17.7	21.0	24.3	27.2	30.2	32.8	36.7	42.0
					NC	-	-	20	27	33	36	39	41	44	48

SIZE	Neck Area	Air Pattern	Face Plate	V.Shutter	Neck Velocity (fpm)	200	300	400	500	600	700	800	900	1000	1200
					Airflow (CFM)	36	54	72	90	108	126	144	162	180	216
6	0.183 sq.ft.	Combination Air Pattern	Fully Opened	Fully Opened	SP(in., wg)	0.004	0.007	0.012	0.02	0.031	0.044	0.06	0.077	0.098	0.14
					Radius of Diffusion(Vt=@100fpm)	0.7	1.0	1.3	1.6	2.0	2.3	2.6	3.0	3.3	3.9
					Radius of Diffusion(Vt=@50fpm)	1.1	1.6	2.1	2.6	3.3	3.6	4.3	4.9	5.2	6.2
					Throw (Vt.=@100fpm)	2.6	3.6	4.6	5.9	6.9	7.9	9.2	10.2	11.2	13.1
					Throw (Vt.=@50fpm)	4.6	6.2	8.2	10.5	12.5	14.1	16.4	18.0	20.0	23.6
					NC	-	-	-	-	-	-	19	23	26	32
		Combination Air Pattern	A Half Way Opened	Fully Opened	SP(in., wg)	0.005	0.01	0.018	0.031	0.049	0.07	0.097	0.124	0.154	0.222
					Radius of Diffusion(Vt=@100fpm)	0.5	0.8	1.1	1.5	1.6	2.0	2.3	2.5	2.8	3.3
					Radius of Diffusion(Vt=@50fpm)	1.0	1.3	1.8	2.3	2.6	3.3	3.6	3.9	4.6	5.2
					Throw (Vt.=@100fpm)	3.3	4.9	5.9	7.9	9.2	10.5	12.1	13.4	14.4	17.1
					Throw (Vt.=@50fpm)	5.9	8.5	10.5	13.8	16.4	18.7	21.6	23.6	25.6	30.5
					NC	-	-	-	-	16	21	26	29	32	38
		Radial Air Pattern	Fully Opened	Closed	SP(in., wg)	0.006	0.013	0.024	0.039	0.058	0.082	0.11	0.136	0.166	0.242
					Radius of Diffusion(Vt=@100fpm)	1.0	1.5	2.0	2.5	3.0	3.6	3.9	4.6	4.9	5.9
					Radius of Diffusion(Vt=@50fpm)	1.6	2.5	3.3	3.9	4.9	5.6	6.2	7.2	7.9	9.5
					NC	-	-	-	-	-	-	19	23	27	34
		Vertical Air Pattern	Closed	Fully Opened	SP(in., wg)	0.028	0.068	0.128	0.202	0.294	0.408	0.528	0.668	0.82	0.172
					Throw (Vt.=@100fpm)	8.5	12.0	15.8	19.6	22.9	25.5	28.5	32.8	36.7	42.6
					Throw (Vt.=@50fpm)	15.4	21.0	27.6	35.0	41.0	45.9	51.0	58.0	65.6	75.0
					NC	-	-	19	26	31	34	38	41	43	48

SIZE	Neck Area	Air Pattern	Face Plate	V.Shutter	Neck Velocity (fpm)	200	300	400	500	600	700	800	900	1000	1200
					Airflow (CFM)	64	54	129	162	194	227	259	291	324	388
8	0.328 sq.ft.	Combination Air Pattern	Fully Opened	Fully Opened	SP(in., wg)	0.005	0.011	0.02	0.03	0.046	0.064	0.086	0.11	0.136	0.196
					Radius of Diffusion(Vt=@100fpm)	1.2	1.0	1.8	2.1	2.6	3.0	3.3	3.6	3.9	4.6
					Radius of Diffusion(Vt=@50fpm)	2.0	1.6	3.0	3.6	4.3	4.9	5.3	5.9	6.2	7.2
					Throw (Vt.=@100fpm)	3.3	3.6	5.6	6.9	8.2	9.5	10.5	11.8	12.5	14.8
					Throw (Vt.=@50fpm)	5.6	6.2	9.8	12.5	14.8	16.4	18.4	20.7	22.3	26.2
					NC	-	-	-	-	-	16	20	24	27	33
		Combination Air Pattern	A Half Way Opened	Fully Opened	SP(in., wg)	0.008	0.016	0.030	0.048	0.074	0.106	0.138	0.176	0.216	0.316
					Radius of Diffusion(Vt=@100fpm)	0.8	0.8	1.5	1.8	2.1	2.5	2.6	3.0	3.3	3.6
					Radius of Diffusion(Vt=@50fpm)	1.5	1.3	2.5	3.0	3.6	3.9	4.3	4.9	5.3	5.9
					Throw (Vt.=@100fpm)	4.3	4.9	8.2	10.5	12.5	14.4	16.4	18.7	20.7	24.6
					Throw (Vt.=@50fpm)	7.9	8.5	14.8	18.4	22.3	25.6	29.5	32.8	36.7	44.3
					NC	-	-	-	-	19	25	31	36	37	41
		Radial Air Pattern	Fully Opened	Closed	SP(in., wg)	0.009	0.022	0.043	0.068	0.102	0.138	0.18	0.228	0.286	0.432
					Radius of Diffusion(Vt=@100fpm)	2.0	1.5	3.3	4.3	4.9	5.6	5.9	6.6	7.2	8.5
					Radius of Diffusion(Vt=@50fpm)	3.3	2.5	5.3	6.6	7.5	8.5	9.5	10.2	11.2	13.1
					NC	-	-	-	-	18	23	28	32	36	42
		Vertical Air Pattern	Closed	Fully Opened	SP(in., wg)	0.036	0.087	0.158	0.246	0.36	0.512	0.668	0.82	1	1.44
					Throw (Vt.=@100fpm)	15.1	12.0	21.3	24.6	27.6	29.9	34.8	34.8	36.7	41.0
					Throw (Vt.=@50fpm)	26.6	21.0	37.7	44.3	49.2	53.1	57.4	61.7	65.6	72.2
					NC	-	-	21	30	36	35	38	42	44	49

DASHED LINE IN NC BOX INDICATES NOISE LEVEL IS LESS THAN 20.
NC LEVEL IS BASED ON 10dB ROOM ATXENUATION(PWL RE:10-12 WATXS) WITH ONE DIFFUSER OPERATING.

Aluminum SpotDiffusers

Model: **PK & PK-E**

The SpotDiffuser model PK and PK-E are excellent for spot heating and cooling remote areas. Kitchens, factories, theaters, indoor sports facilities, airport terminals or any place where you need to move conditioned air from an inaccessible place to the work environment is easily handled by the PK and PK-E SpotDiffusers. Engineered to exacting standards and stylish in design, the PK and PK-E are the perfect choices for many new and retrofit building construction.

Model: **PK**

Model: **PK-E**
(without Damper)

MATERIAL	FINISH
• Aluminum	• Clear Anodized • Custom Colors Available

FEATURES

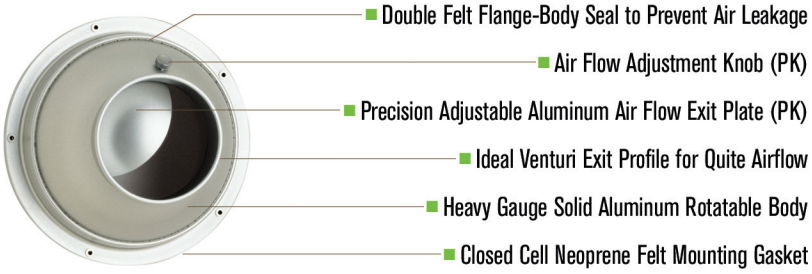

- The model PK and PK-E can be mounted in a vertical or horizontal position or any angle in between. The architect or engineer has unlimited applications and an infinite choice of mounting locations.

- The ventilation efficiency of the PK and PK-E allow long airflow throws to ventilate or condition remote areas where ducting would be impractical or cost prohibitive.

- The directional control can pinpoint the airflow where it's needed as space or occupant configurations change. This feature makes these units ideal for use on stages and movie sets.

- The modulating volume control allows precise adjustment of airflow in all application without need for special tools, removal or disassembly (PK).

- The lightweight and corrosion-resistant finish make these units easy to install and tailored to a variety of applications. Its solid construction makes this unit rugged and durable in adverse conditions, without possibility of failure of a weld or rivet.

CONSTRUCTION

- The SEIHO Model PK and PK-E Aluminum SpotDiffusers are manufactured from heavy-gauge aluminum. The overall heavy-duty construction exceeds industry standards by a wide margin. The multi-directional louver body and all other components are machined to close tolerances from solid aluminum alloys, then bright polished. The flange-to-body gasket consists of two tandem felt strips for a leak-proof seal. These components comprise a unit which provides smooth movement of the louver body when adjusting its direction. The flange mounting gasket is closed-cell neoprene or felt, depending on unit size.

A knurled aluminum thumb-operated airflow adjustment knob facilitates control of airflow by regulating the volume out of the exit nozzle with the precision internal damper (PK). The internal damper is under tension by a stainless steel spring for sealing and quiet operation (PK).

DESIGN

- SEIHO's Model PK and PK-E pivoting body can be rotated in any 3-dimensional direction around its internal center.

- Maximum rotation angle up to 33° to 42° in all direction from its center axis.

- Air flow can be directed up to 90-feet depending upon CFM available. Refer to Performance Data for specific model.

MODEL PK DIMENSIONS

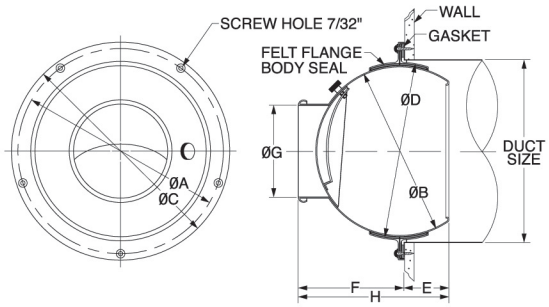

MODEL PK-E DIMENSIONS

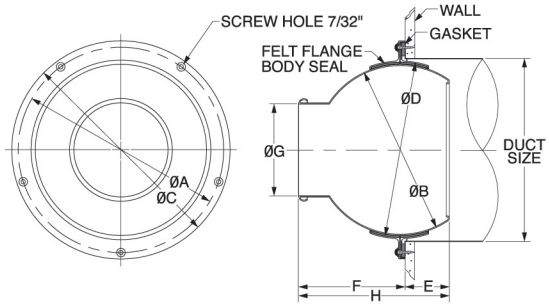

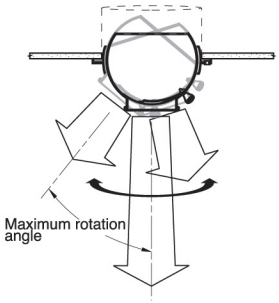

MODEL		DUCT SIZE	A	B	C	D	E	F	G	H	SCREW HOLES	WEIGHT Lbs.	MAX ROATTION ANGLE
PK 3	PK 3E	3 11/32	3 13/16	2 15/16	4 17/32	3 7/32	21/32	2 3/32	1 1/2	2 3/4	3	0.29	33°
PK 4	PK 4E	4 11/32	4 13/16	3 15/16	5 1/2	4 7/32	15/16	2 9/16	1 31/32	3 1/2	4	0.40	41°
PK 5	PK 5E	5 1/2	5 31/32	5 1/8	6 11/16	5 13/32	1 15/16	3 7/32	2 9/16	4 17/32	5	0.75	42°
PK 6	PK 6E	6 5/16	6 25/32	5 29/32	7 15/32	6 7/32	1 1/2	3 11/16	2 15/16	5 3/16	5	0.82	43°
PK 7	PK 7E	7 15/32	8 3/8	7	9 3/32	7 9/32	1 1/2	4 3/8	3 17/32	5 7/8	5	1.02	42°
PK 8	PK 8E	8 3/16	9 1/8	7 7/8	9 27/32	8 1/32	1 23/32	4 23/32	3 15/16	6 7/16	5	1.28	42°
PK 10	PK 10E	11 1/32	11 31/32	10 1/2	12 3/4	10 7/8	1 31/32	6 27/32	5 1/2	8 13/16	5	2.10	40°
PK 12	PK 12E	12 17/32	13 15/32	12	14 9/32	12 3/8	2 15/32	7 7/8	6 1/2	10 11/32	5	2.60	39°
PK 14	PK 14E	12 17/32	13 15/32	12	14 9/32	12 3/8	2 3/8	7 9/32	7 15/32	9 5/8	5	2.60	39°
PK 16	PK 16E	16 23/32	17 3/4	16 5/32	18 1/2	16 1/2	3 5/8	9 3/4	9 1/6	13 3/8	8	4.41	40°
PK 18	PK 18E	19 1/8	20 1/8	18 1/2	21 1/16	18 27/32	3 3/4	11 5/8	10 1/4	15 11/32	8	5.80	38°
PK 20	PK 20E	19 1/8	20 1/8	18 1/2	21 1/16	18 27/32	3 3/4	11 5/8	12 7/32	15 11/32	8	6.02	34°

Product information is subject to change without notice. All dimensions in inches.

VERSATILITY

The PK and PK-E SpotDiffusers can be used for many different projects. For example:

- Restaurants
- Office Buildings
- Shopping Centres
- Hospitals
- Retail Stores
- Ships
- Sports Facilities
- Studios
- Convention Centres
- Factories
- Theatres
- Airport Concourses

FINISH

- The standard finish is clear anodized aluminum. Powder coatings in a variety of colors are available upon request at a nominal charge. Please contact our sales department for assistance and detailed ordering information.

INSTALLATION

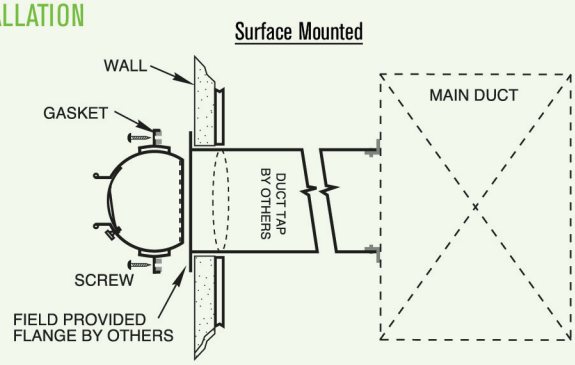

- The SEIHO Model PK and PK-E Aluminum SpotDiffusers are designed for ease of installation on any ceiling or wall surface after all other mechanical and architectural work has been completed-no interference with other hidden or exposed items during the construction process, and therefore no cause for delays. Because of the light weight aluminum construction, the Model PK and PK-E require no special hangers.

- For direct tap installation at the duct the Model PK and PK-E can be screwed directly to the duct. Duct velocities should be low, about 500 fpm.

- The Model PK and PK-E are simply installed using no special tools or techniques required. Final airflow adjustments can then be made by the installer, or during air balancing of the room or building. Variations are easy if the room use is altered.

Aluminum SpotDiffuser
Performance Data

Model: **PK & PK-E**

SEIHO
www.seiho.com

SIZE	Approx.Nozzle Velocity		500				1000				1500				2000				2500				3000				3500				4000			
	Terminal Velocity, Vt		50	100	200	400	50	100	200	400	50	100	200	400	50	100	200	400	50	100	200	400	50	100	200	400	50	100	200	400	50	100	200	400
3	Nozzle Area 0.012 sq.ft	CFM	5				10				15				20				25				35				40				45			
		SP (in.,wg)	0.01				0.03				0.09				0.19				0.31				0.75				0.82				1.1			
		NC	-				-				-				<20				<20				21				23				25			
		Throw (ft.)	7	5	2	-	12	7	3	-	18	9	6	2	25	12	7	3	31	15	8	4	50	25	12	6	55	27	13	7	60	30	15	8
4	Nozzle Area 0.021 sq.ft	CFM	10				20				30				40				50				60				70				80			
		SP (in.,wg)	0.01				0.05				0.14				0.25				0.39				0.56				0.8				1.05			
		NC	-				-				<20				<20				21				24				28				32			
		Throw (ft.)	9	6	3	-	18	10	5	-	27	14	7	3	36	18	9	5	44	23	12	6	53	28	14	7	65	32	16	8	75	37	18	9
5	Nozzle Area 0.026 sq.ft	CFM	20				40				60				80				90				110				130				150			
		SP (in.,wg)	0.02				0.07				0.18				0.31				0.40				0.68				0.93				1.3			
		NC	-				-				<20				<20				22				27				32				35			
		Throw (ft.)	15	10	5	-	30	15	8	2	42	21	9	6	55	29	15	8	62	35	17	9	80	40	19	10	98	45	29	12	105	52	27	14
6	Nozzle Area 0.047 sq.ft	CFM	25				50				80				100				120				150				170				190			
		SP (in.,wg)	0.02				0.07				0.18				0.29				0.44				0.82				0.93				1.2			
		NC	-				-				<20				20				21				27				30				33			
		Throw (ft.)	19	10	5	-	30	16	8	4	50	25	13	8	65	31	17	9	80	37	20	10	100	45	23	12	110	55	28	14	125	50	30	15
7	Nozzle Area 0.068 sq.ft	CFM	35				70				110				140				170				210				240				280			
		SP (in.,wg)	0.016				0.06				0.18				0.28				0.41				0.65				0.9				1.25			
		NC	-				-				<20				20				25				29				34				38			
		Throw (ft.)	22	11	6	2	36	19	9	4	60	29	15	8	80	36	19	10	90	45	23	12	105	60	27	14	125	65	32	16	150	72	37	19
8	Nozzle Area 0.085 sq.ft	CFM	45				90				130				170				220				260				300				340			
		SP (in.,wg)	0.016				0.06				0.17				0.27				0.38				0.64				0.92				1.2			
		NC	-				<20				<20				22				27				33				35				39			
		Throw (ft.)	25	12	7	4	40	20	12	6	62	30	16	9	85	39	20	11	105	52	27	13	125	62	30	17	150	72	35	19	162	80	38	20
10	Nozzle Area 0.165 sq.ft	CFM	85				170				250				330				420				500				580				660			
		SP (in.,wg)	0.014				0.06				0.14				0.24				0.44				0.63				0.92				1.2			
		NC	-				<20				<20				20				26				30				34				38			
		Throw (ft.)	30	15	8	5	55	30	14	7	90	42	22	10	112	55	29	14	148	72	36	17	162	84	42	21	190	100	48	24	225	112	55	28
12	Nozzle Area 0.230 sq.ft	CFM	115				230				350				460				580				690				810				920			
		SP (in.,wg)	0.012				0.055				0.12				0.22				0.43				0.6				0.92				1.2			
		NC	-				<20				<20				23				28				32				36				40			
		Throw (ft.)	35	17	9	6	66	35	17	7	100	50	27	13	137	65	34	17	162	82	42	22	187	100	50	26	220	112	57	29	250	130	70	34
16	Nozzle Area 0.448 sq.ft	CFM	225				450				680				900				1120				1350				1570				1800			
		SP (in.,wg)	0.012				0.06				0.12				0.21				0.41				0.62				0.9				1.2			
		NC	-				20				21				26				29				37				40				44			
		Throw (ft.)	47	25	12	7	90	47	24	12	138	66	36	18	175	95	47	23	225	112	55	28	250	137	65	35	275	160	80	42	350	175	95	47
18	Nozzle Area 0.573 sq.ft	CFM	290				580				860				1150				1440				1720				2010				2300			
		SP (in.,wg)	0.01				0.06				0.10				0.21				0.42				0.6				0.9				1.15			
		NC	-				<20				20				25				31				35				39				42			
		Throw (ft.)	55	27	13	7	112	55	27	13	152	98	40	20	200	110	52	26	250	125	67	33	300	155	78	40	350	175	90	47	400	200	110	48
20	Nozzle Area 0.814 sq.ft	CFM	410				820				1230				1630				2040				2450				2850				3260			
		SP (in.,wg)	0.01				0.06				0.12				0.17				0.41				0.61				0.9				1.2			
		NC	-				<20				20				27				32				38				42				45			
		Throw (ft.)	70	38	20	10	150	75	39	18	220	112	56	29	275	150	75	37	350	175	90	47	400	212	112	56	425	250	125	65	450	275	150	75

DASHED LINE IN SP BOX INDICATES STATIC PRESSURE IS LESS THAN 0.01 IN.W.G.
DASHED LINE IN NC BOX INDICATES NOISE LEVEL IS LESS THAN 20.
NC LEVEL IS BASED ON 10dB ROOM ATTENUATION(PWL RE:10-12 WATTS) WITH ONE DIFFUSER OPERATING.

Model: **PKP**

MATERIAL

- SpotDiffuser - Aluminum
- SpotPac Plate - Stainless Steel (304)

FINISH

- SpotDiffuser - Clear Anodized
- SpotPac Plate - Brushed
- Custom Colors Available

FEATURES

- Independently adjustable
- Air condition up to four locations with one air distribution location
- Space saving
- Easy installation
- Uses standard ducts
- Custom size can replace existing grilles and registers with no modifications

MODEL PKP DIMENSIONS

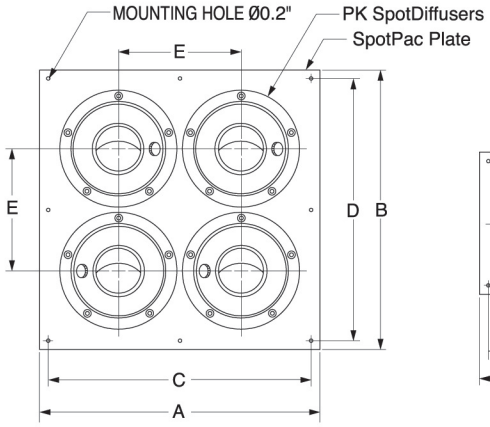

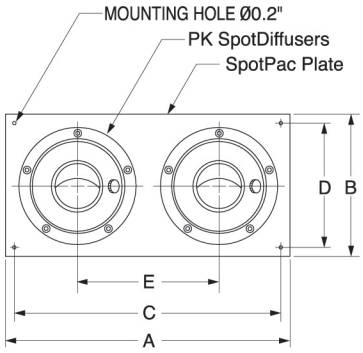

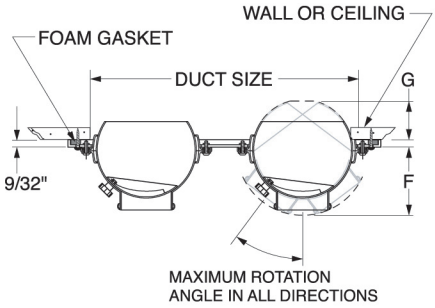

MODEL	DUCT SIZE	PK SIZE x QTY.	A	B	C	D	E	F	G	MAX ROATTION ANGLE
PKP 32-104	10 x 4	PK 3 x 2	12	6	11	5	6	2 1/4	1 7/8	33°
PKP 42-126	12 x 6	PK 4 x 2	14	8	13	7	7	2 29/32	1 7/16	41°
PKP 52-146	14 x 6	PK 5 x 2	16	8	15	7	8	3 17/32	2 1/32	44°
PKP 62-168	16 x 8	PK 6 x 2	18	10	17	9	9	4 1/32	2 7/16	43°
PKP 72-189	18 x 9	PK 7 x 2	20	11	19	10	9 11/32	3 19/32	2 1/16	43°
PKP 82-2010	20 x 10	PK 8 x 2	22	12	21	11	10	3 19/32	2 1/16	33°
PKP 34-1010	10 x 10	PK 3 x 4	12	12	11	11	5	2 1/4	1 7/8	33°
PKP 44-1212	12 x 12	PK 4 x 4	14	14	13	13	6	2 29/32	1 7/16	41°
PKP 54-1414	14 x 14	PK 5 x 4	16	16	15	15	7	3 17/32	2 1/32	44°
PKP 64-1616	16 x 16	PK 6 x 4	18	18	17	17	8	4 1/32	2 7/16	43°
PKP 74-1818	18 x 18	PK 7 x 4	20	20	19	19	9 11/32	3 19/32	2 1/16	43°
PKP 84-2020	20 x 20	PK 8 x 4	22	22	21	21	10	3 19/32	2 1/16	33°

Product information is subject to change without notice. All dimensions in inches.

Air Shower Nozzles
(for Cleanroom)

Model: **PK-A & PK-AD**

SEIHO
www.seiho.com

Model: **PK-AD**
(with Damper)

Model: **PK-A**
(without Damper)

MATERIAL
- Aluminum

FINISH
- Clear Anodized
- Custom Colors Available

Seiho's compact Model PK-AD and PK-A Aluminum Wall/Ceiling SpotDiffusers are specially designed for a flush flange mounting to wall and ceiling construction within air shower systems. The flush-mount nozzles offer efficient use of space within the air shower chamber while providing complete directional adjustability for operational flexibility. The nozzles are arranged on walls and ceilings in a uniform pattern to ensure effective distribution of filtered air. The PK-AD features directional air stream control and precision air flow adjustment, whereas the PK-A is capable of directional control only. The heavy-gauge anodized aluminum is corrosion-resistant for years of service. The finished aluminum integrates seamlessly with various types of air shower systems.

MODEL PK-AD DIMENSIONS

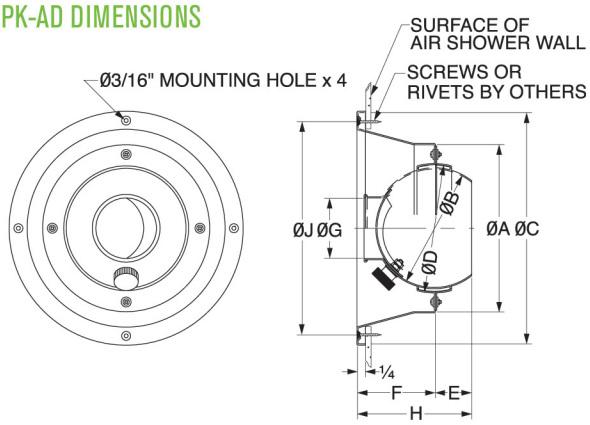

MODEL PK-A DIMENSIONS

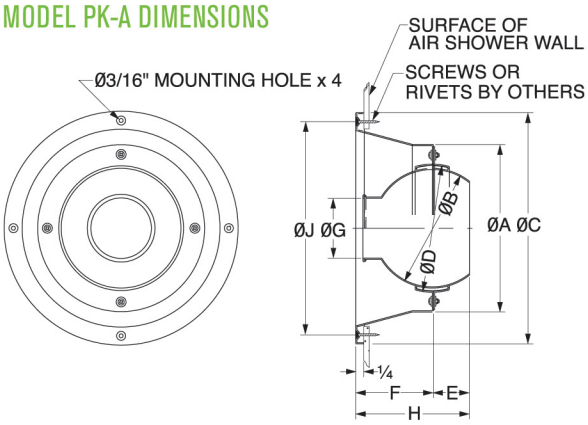

MODEL		PK SIZE	A	B	C	D	E	F	G	H	J
PK 3AD	PK 3A	PK 3	4 5/16	2 15/16	6 3/16	3 7/32	21/32	2 3/16	1 1/2	2 27/32	5 19/32
PK 4AD	PK 4A	PK 4	5 5/16	3 15/16	7 9/32	4 7/32	15/16	2 3/4	1 31/32	3 11/16	6 11/16

Product information is subject to change without notice. All dimensions in inches.

MODEL PK-AD & PK-A PERFORMANCE DATA

SIZE	Approx.NozzleVelocity		500				1000				1500				2000				2500				3000				3500				4000			
	TerminalVelocity, Vt		50	100	200	400	50	100	200	400	50	100	200	200	50	100	200	400	50	100	200	400	50	100	200	400	50	100	200	400	50	100	200	400
3	Nozzle Area 0.012 sq.ft.	CFM	5				10				15				20				25				35				40				45			
		SP(in.,wg)	0.01				0.03				0.09				0.19				0.31				0.75				0.82				1.10			
		NC	-				-				-				<20				<20				21				23				25			
		Throw(ft.)	7	5	2	-	12	7	3	-	18	9	6	2	25	12	7	3	31	15	8	4	50	25	12	6	55	27	13	7	60	30	15	8
4	Nozzle Area 0.021 sq.ft.	CFM	10				20				30				40				50				60				70				80			
		SP(in.,wg)	0.01				0.05				0.14				0.25				0.39				0.56				0.80				1.05			
		NC	-				-				<20				<20				21				24				28				32			
		Throw(ft.)	9	6	3	-	18	10	5	-	27	14	7	3	36	18	9	5	44	23	12	6	53	28	14	7	65	32	16	8	75	37	18	9

DASHED LINE IN NC BOX INDICATES NOISE LEVEL IS LESS THAN 20.
NC LEVEL IS BASED ON 10dB ROOM ATXENUATION(PWL RE:10-12 WATXS) WITH ONE DIFFUSER OPERATING.

SpotDiffusers
with Round Duct Adapter

Model: **PK-R & PK-RA**

Seiho's Model PK-R/PK-RA Aluminum SpotDiffuser offers excellent architectural styling for directional control in supply applications. The PK-R designed specifically for mounting to round (spiral) sheet metal duct work, it provides an integral, readily-accessible air flow adjustment. The heavy-gauge anodized, aluminum and stainless steel construction is corrosion-resistant for years of service. The anodized aluminum finish integrates seamlessly with the galvanized sheet metal finish and color.

MATERIAL	FINISH
• Aluminum	• Clear Anodized • Custom Colors Available

Model: **PK-R**
(Exposed Duct Mounted)

MODEL PK-R DIMENSIONS

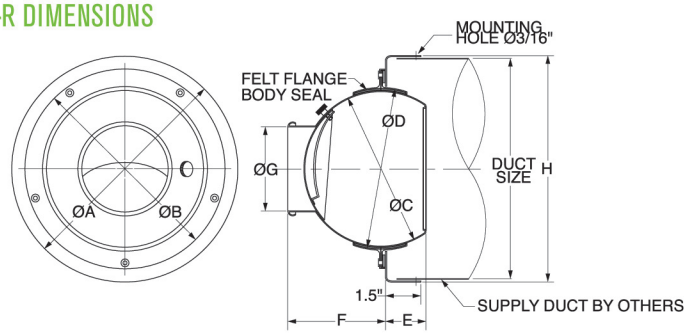

■ Duct Size=PK-R Size Plus 2"-6"

MODEL	DUCT SIZE	A	B	C	D	E	F	G	H
PK 6R	8	8 11/32	7 15/32	5 29/32	6 7/32	1 1/2	3 11/16	2 15/16	8 1/4
PK 7R	10	10 3/8	9 3/32	7	7 9/32	1 1/2	4 3/8	3 17/32	10 1/4
PK 8R	11	11 3/8	9 27/32	7 7/8	8 1/32	1 23/32	4 23/32	3 15/16	11 1/4
PK 10R	14	14 3/8	12 3/4	10 1/2	10 7/8	1 31/32	6 27/32	5 1/2	14 1/4
PK 12R	16	16 3/8	14 9/32	12	12 3/8	2 15/32	7 7/8	6 1/2	16 1/4
PK 16R	20	20 3/8	18 1/2	16 5/32	16 1/2	3 5/8	9 3/4	9 1/16	20 1/4
PK 18R	24	24 3/8	21 1/16	18 1/2	18 27/32	3 3/4	11 5/8	10 1/4	24 1/4
PK 20R	24	24 3/8	21 1/16	18 16/32	18 27/32	3 3/4	11 5/8	12 7/32	24 1/4

Product information is subject to change without notice. All dimensions in inches.

Model: **PK-RA**
(Wall/Spiral Duct Mounted)

MODEL PK-RA DIMENSIONS

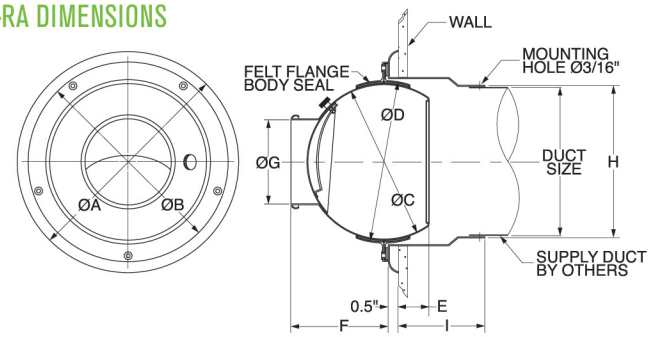

MODEL	DUCT SIZE	A	B	C	D	E	F	G	H	I
PK 6RA	6	8 11/32	7 15/32	5 29/32	6 7/32	1 1/2	3 11/16	2 15/16	6 1/4	1 1/2
PK 7RA	7	10 3/32	9 3/32	7	7 9/32	1 1/2	4 3/8	3 17/32	7 1/4	2
PK 8RA	8	11 27/32	9 27/32	7 7/8	8 1/32	1 23/32	4 23/32	3 15/16	8 1/4	2
PK 10RA	10	13 3/4	12 3/4	10 1/2	10 7/8	1 31/32	6 27/32	5 1/2	10 1/4	3 1/2
PK 12RA	12	15 5/16	14 9/32	12	12 3/8	2 15/32	7 7/8	6 1/2	12 1/4	4
PK 16RA	16	19 1/2	18 1/2	16 5/32	16 1/2	3 5/8	9 3/4	9 1/16	16 1/4	5
PK 18RA	20	22 1/16	21 1/16	18 1/2	18 27/32	3 3/4	11 5/8	10 1/4	20 1/4	5
PK 20RA	20	22 1/16	21 1/16	18 16/32	18 27/32	3 3/4	11 5/8	12 7/32	20 1/4	5

Product information is subject to change without notice. All dimensions in inches.

Aluminum SpotDiffuser
Performance Data

Model: **PK-R & PK-RA**

SEIHO
www.seiho.com

SIZE	Approx.Nozzle Velocity		500				1000				1500				2000				2500				3000				3500				4000			
	Terminal Velocity, Vt		50	100	200	400	50	100	200	400	50	100	200	400	50	100	200	400	50	100	200	400	50	100	200	400	50	100	200	400	50	100	200	400
6	Nozzle Area 0.047 sq.ft	CFM	25				50				80				100				120				150				170				190			
		SP (in.,wg)	0.02				0.07				0.18				0.29				0.44				0.82				0.93				1.2			
		NC	-				-				<20				20				21				27				30				33			
		Throw (ft.)	19	10	5	-	30	16	8	4	50	25	13	8	65	31	17	9	80	37	20	10	100	45	23	12	110	55	28	14	125	50	30	15
7	Nozzle Area 0.068 sq.ft	CFM	35				70				110				140				170				210				240				280			
		SP (in.,wg)	0.016				0.06				0.18				0.28				0.41				0.65				0.9				1.25			
		NC	-				-				<20				20				25				29				34				38			
		Throw (ft.)	22	11	6	2	36	19	9	4	60	29	15	8	80	36	19	10	90	45	23	12	105	60	27	14	125	65	32	16	150	72	37	19
8	Nozzle Area 0.085 sq.ft	CFM	45				90				130				170				220				260				300				340			
		SP (in.,wg)	0.016				0.06				0.17				0.27				0.38				0.64				0.92				1.2			
		NC	-				<20				<20				22				27				33				35				39			
		Throw (ft.)	25	12	7	4	40	20	12	6	62	30	16	9	85	39	20	11	105	52	27	13	125	62	30	17	150	72	35	19	162	80	38	20
10	Nozzle Area 0.165 sq.ft	CFM	85				170				250				330				420				500				580				660			
		SP (in.,wg)	0.014				0.06				0.14				0.24				0.44				0.63				0.92				1.2			
		NC	-				<20				<20				20				26				30				34				38			
		Throw (ft.)	30	15	8	5	55	30	14	7	90	42	22	10	112	55	29	14	148	72	36	17	162	84	42	21	190	100	48	24	225	112	55	28
12	Nozzle Area 0.230 sq.ft	CFM	115				230				350				460				580				690				810				920			
		SP (in.,wg)	0.012				0.055				0.12				0.22				0.43				0.6				0.92				1.2			
		NC	-				<20				<20				23				28				32				36				40			
		Throw (ft.)	35	17	9	6	66	35	17	7	100	50	27	13	137	65	34	17	162	82	42	22	187	100	50	26	220	112	57	29	250	130	70	34
16	Nozzle Area 0.448 sq.ft	CFM	225				450				680				900				1120				1350				1570				1800			
		SP (in.,wg)	0.012				0.06				0.12				0.21				0.41				0.62				0.9				1.2			
		NC	-				20				21				26				29				37				40				44			
		Throw (ft.)	47	25	12	7	90	47	24	12	138	66	36	18	175	95	47	23	225	112	55	28	250	137	65	35	275	160	80	42	350	175	95	47
18	Nozzle Area 0.573 sq.ft	CFM	290				580				860				1150				1440				1720				2010				2300			
		SP (in.,wg)	0.01				0.06				0.10				0.21				0.42				0.6				0.9				1.15			
		NC	-				<20				20				25				31				35				39				42			
		Throw (ft.)	55	27	13	7	112	55	27	13	152	98	40	20	200	110	52	26	250	125	67	33	300	155	78	40	350	175	90	47	400	200	110	48
20	Nozzle Area 0.814 sq.ft	CFM	410				820				1230				1630				2040				2450				2850				3260			
		SP (in.,wg)	0.01				0.06				0.12				0.17				0.41				0.61				0.9				1.2			
		NC	-				<20				20				27				32				38				42				45			
		Throw (ft.)	70	38	20	10	150	75	39	18	220	112	56	29	275	150	75	37	350	175	90	47	400	212	112	56	425	250	125	65	450	275	150	75

DASHED LINE IN SP BOX INDICATES STATIC PRESSURE IS LESS THAN 0.01 IN.W.G.
DASHED LINE IN NC BOX INDICATES NOISE LEVEL IS LESS THAN 20.
NC LEVEL IS BASED ON 10dB ROOM ATTENUATION(PWL RE:10-12 WATTS) WITH ONE DIFFUSER OPERATING.

SpotDiffuser
with Condensation Control Air Guide

Model: **PK-K**

Seiho's popular SpotDiffuser is now available with the Condensation Control Air Guide - PK-K! The PK-K's Air Guide is designed to lead the air to the diffuser's outer surface, and help reduce the area where condensation may occur. The Air Guide is made of low thermal conductance material with the dual airflow design (Patent Pending). The PK-K is virtually condensation-free and is perfect for high humidity areas such as gyms, kitchens and food processing facilities.

Model: **PK-K**

MATERIAL
- SpotDiffuser: Aluminum
- Air Guide: ABS Resin

FINISH
- SpotDiffuser: Anodized
- Air Guide: Gray
- Custom Colors Available

FEATURES

- Made of low thermal conductance material (ABS Resin)
- Dual Air Flow design also helps to reduce condensation on Air Guide

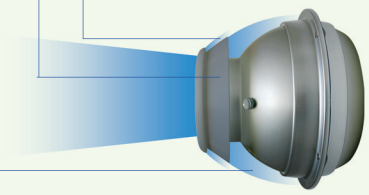

- Air envelope that is created by the air guide covers the cold surface of the diffuser and reduces condensation build-up.

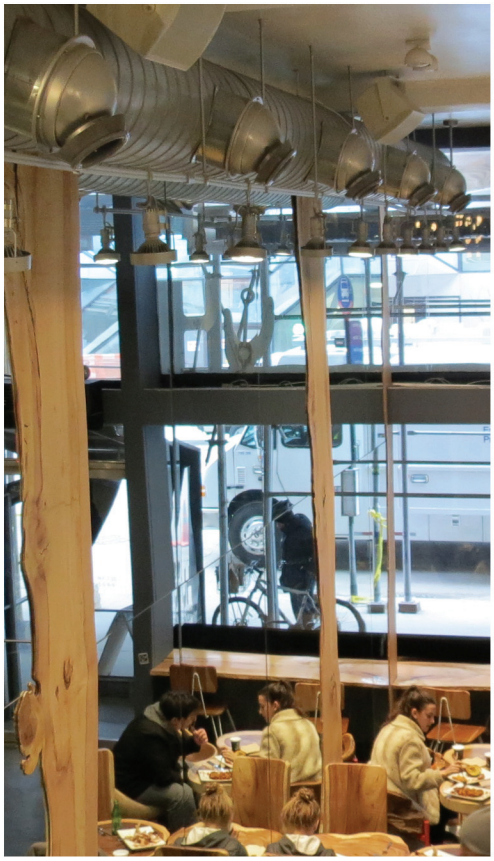

MODEL PK-K DIMENSIONS

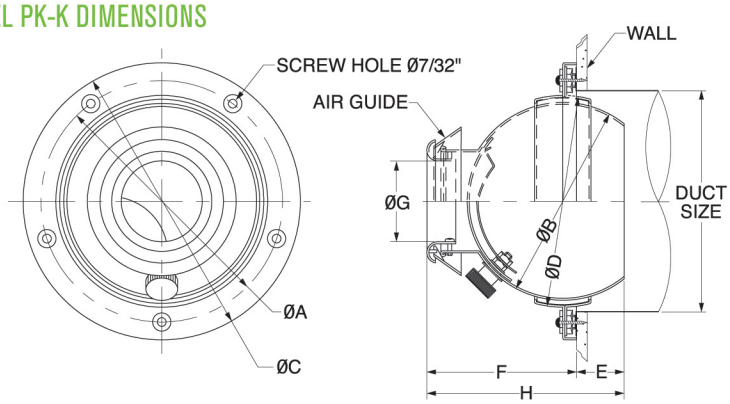

MODEL	DUCT SIZE	PK SIZE	A	B	C	D	E	F	G	H
PK 6K	6 5/16	PK 6	6 25/32	5 29/32	7 15/32	6 7/32	1 1/2	4 7/32	2 5/32	5 23/32
PK 8K	8 3/16	PK 8	9 1/8	7 7/8	9 27/32	8 1/32	1 23/32	5 3/8	3	7 1/8
PK10K	11 1/32	PK10	11 31/32	10 1/2	12 3/4	10 7/8	1 31/32	7 1/4	4 9/16	9 7/32
PK12K	12 17/32	PK12	13 15/32	12	14 9/32	12 3/8	2 15/32	8 1/2	5 1/8	10 31/32
PK12WK	12 17/32	PK12WIDE	13 15/32	12	14 9/32	12 3/8	2 5/32	8 1/16	6 9/32	10 7/16
PK16K	16 23/32	PK16	17 3/4	16 5/32	18 1/2	16 1/2	3 5/8	10 7/8	7 1/4	14 1/2
PK20K	19 1/8	PK20	20 1/8	18 1/2	21 1/16	18 27/32	3 3/4	13 5/32	9 21/32	16 29/32

Product information is subject to change without notice. All dimensions in inches.

MODEL PK-K PERFORMANCE DATA

SIZE	Nozzle Area	Nozzle Velocity (fpm)	400	600	800	1000	1200	1400	1600	1800	2000
PK8K	Ø2.99in 0.0484sq.ft.	CFM	27	41	56	71	85	100	115	130	144
		SP (in.,wg.)	0.01	0.02	0.04	0.06	0.10	0.13	0.17	0.22	0.27
		Throw (Vt=@100fpm)	5	8	10	12	15	18	20	23	26
		Throw (Vt=@50fpm)	8	12	16	20	24	29	33	37	41
		NC	-	-	-	-	21.2	27.5	32.7	37.1	40.8
PK10K	Ø4.528in 0.112sq.ft.	CFM	59	89	118	148	177	207	236	266	295
		SP (in.,wg.)	0.01	0.02	0.04	0.06	0.09	0.12	0.16	0.20	0.25
		Throw (Vt=@100fpm)	7	11	15	18	22	26	31	34	39
		Throw (Vt=@50fpm)	12	17	24	30	36	42	48	55	62
		NC	-	-	-	-	19.3	25.0	30.3	34.4	37.9
PK12K	Ø5.315in 0.154sq.ft.	CFM	77	118	159	200	241	283	324	365	406
		SP (in.,wg.)	0.01	0.02	0.04	0.06	0.09	0.12	0.16	0.21	0.26
		Throw (Vt=@100fpm)	9	13	17	22	26	31	36	40	45
		Throw (Vt=@50fpm)	14	20	27	35	41	49	57	64	72
		NC	-	-	-	-	19.5	24.9	30.2	34.3	38.1
PK12WK	Ø6.102in 0.203sq.ft.	CFM	100	153	206	259	312	365	418	471	524
		SP (in.,wg.)	0.01	0.02	0.04	0.06	0.09	0.12	0.16	0.20	0.25
		Throw (Vt=@100fpm)	10	15	20	25	30	36	41	46	51
		Throw (Vt=@50fpm)	16	24	32	40	48	57	66	74	82
		NC	-	-	-	-	21.3	27.4	32.3	36.0	39.1
PK16K	Ø7.32in 0.292sq.ft.	CFM	153	236	318	401	483	565	648	730	813
		SP (in.,wg.)	0.01	0.02	0.03	0.05	0.08	0.11	0.14	0.18	0.22
		Throw (Vt=@100fpm)	11	17	22	28	33	40	46	51	56
		Throw (Vt=@50fpm)	18	28	36	45	54	64	73	82	91
		NC	-	-	-	18.2	25.4	31.6	36.1	39.9	43.4
PK20K	Ø9.65in 0.507sq.ft.	CFM	253	386	518	650	783	915	1048	1180	1313
		SP (in.,wg.)	0.01	0.02	0.03	0.05	0.08	0.11	0.14	0.17	0.21
		Throw (Vt=@100fpm)	13	20	27	33	40	47	53	60	66
		Throw (Vt=@50fpm)	21	32	43	53	64	74	85	95	106
		NC	-	-	-	18.7	25.8	32.0	36.5	40.4	43.9

DASHED LINE IN NC BOX INDICATES NOISE LEVEL IS LESS THAN 20.

CONDENSATION PERFORMANCE CHART

No condensation occurs at any point below the curves.

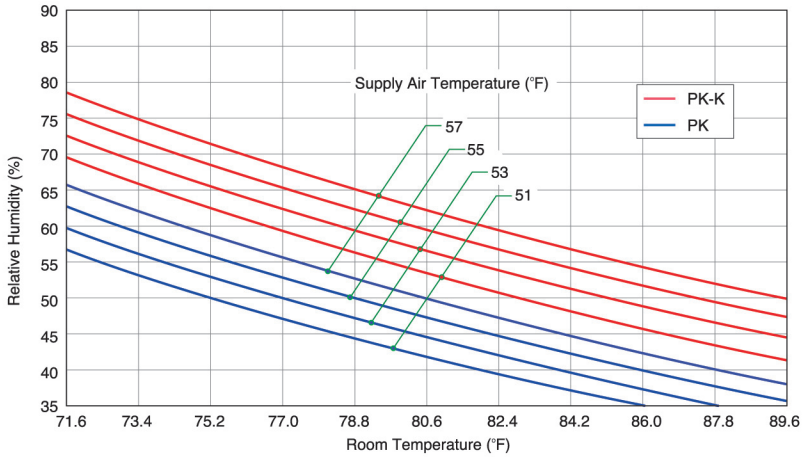

At Room Temperature 79 degrees F and supply air temperature 57 degrees F, For Standard PK Models: Condensation occurs when the relative humidity exceeds 53%. For Anti-condensation PK-K Models: Condensation does not occur until the relative humidity reaches 65%.

(PK20K Drip Test)

As for Model PK20K, at neck velocity 985 fpm, condensation occurs under the following conditions:

- Room Temperature: 79 degrees F
- Supply Air Temperature: 57 degrees F
- Relative Humidity: 65% (Dew Point: 66 degrees F)

However, no drip is observed after a prolonged period of 24 hours. At neck velocity 1575 fpm, no drip is observed for 6 hours.

CONDENSATION TESTING

Size: #10
Room Temperature: 79F
Supply Air Temperature: 52F
Relative Humidity: 57%
Dew Point: 62F
Neck Velocity: 2000FPM

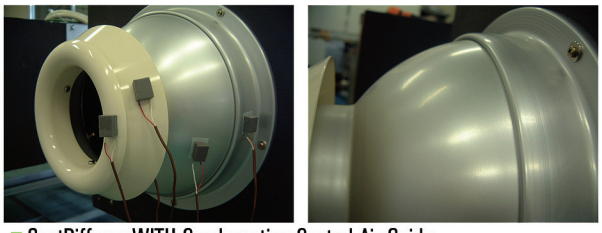

■ SpotDiffuser WITH Condensation Control Air Guide

■ SpotDiffuser WITHOUT Condensation Control Air Guide

Aluminum TurboNozzles

Model: **NT & NP**

Model: **NT**

Model: **NP**

Seiho's TurboNozzle combines a stylish anodized aluminum finish with exceptionally high quality construction. The deep housing and inner concentric rings are designed specifically for those high volume long throw applications. The NT provides a distribution pattern more diffuse than our PK series, but not as much as the RHV/NR series. The aluminum and stainless steel design contribute to the NT's light weight so much so that it is easily installed and held in place by strong spring clips. No unsightly screws are necessary!*
Made in U.S.A.

*Note: NT & NP are designed for wall mounting. Screws must be used for ceiling mounting.

MATERIAL	FINISH
• Aluminum	• Clear Anodized • Custom Colors Available

FEATURES

- Contemporary Design
- Long Air Throws
- Easy installation
- Wall or Ceiling Mountable
- Infinitely Adjustable 2-Axis Core for Directional Control
- Heavy Gauge Aluminum Body
- Available for Standard Duct Sizes

MODEL NT DIMENSIONS

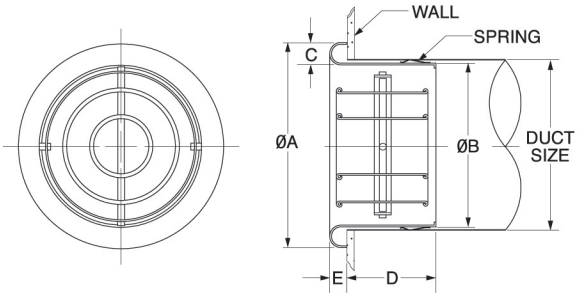

MODEL NP DIMENSIONS

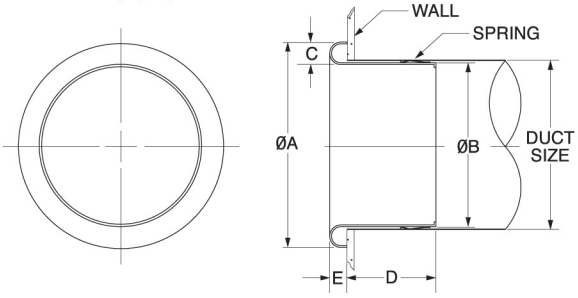

MODEL	DUCT SIZE	A	B	C	D	E
NT 4 / NP 4	4	4 3/4	3 5/8	5/8	2	1/2
NT 6 / NP 6	6	7 3/16	5 17/32	7/8	3 11/32	11/16
NT 8 / NP 8	8	9 13/32	7 17/32	1	4 1/4	3/4
NT10 / NP10	10	11 7/8	9 1/2	1 1/4	5 1/16	15/16
NT12 / NP12	12	14 11/32	11 15/32	1 1/2	4 7/8	1 1/8
NT14 / NP14	14	16 5/8	13 7/16	1 21/32	4 3/4	1 7/32
NT16 / NP16	16	18 25/32	15 13/32	1 3/4	4 11/16	1 5/16
NT20 / NP20	20	23 7/16	19 9/16	2	6 1/2	1 1/2
NT24 / NP24	24	27 7/16	23 9/16	2	6 1/2	1 1/2

Product information is subject to change without notice. All dimensions in inches.

Model: **NT-P**

The popular NT TurboNozzle is available in a panel mounted design. Select from one, two, three, or four NT's per panel. Perfect for retro-fitting an existing air grilles, or for new construction. For wall or ceiling mounting. Construction consists of stainless steel and heavy gauge aluminum. Finishes are clear anodized nozzle with brushed panel. Custom size panels are available.
Made in U.S.A.

MATERIAL
- TurboNozzle - Aluminum
- Plate - Stainless Steel (304)

FINISH
- TurboNozzle - Clear Anodized
- Plate - Brushed
- Custom Colors Available

MODEL NT-P DIMENSIONS

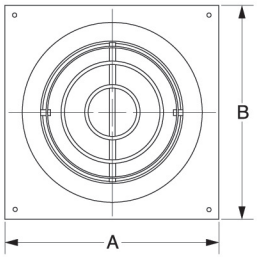

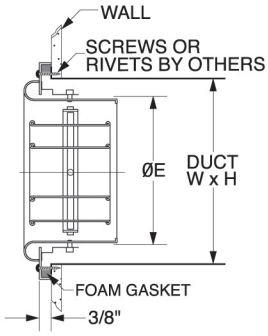

MODEL	DUCT SIZE		A	B	E
	SQUARE W x H	ROUND (Ø) INCHES			
NT 4P	6 x 6	6	7 ½	7 ½	4
NT 6P	8 x 8	8	9 ½	9 ½	6
NT 8P	10 x 10	10	12	12	8
NT 10P	12 x 12	12	14	14	10
NT 12P	14 x 14	14	17	17	12
NT 14P	16 x 16	16	19	19	14
NT 16P	18 x 18	18	21	21	16

Product information is subject to change without notice. All dimensions in inches.

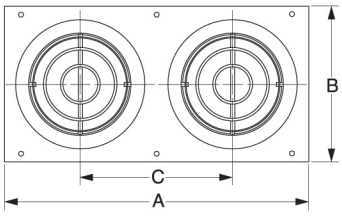

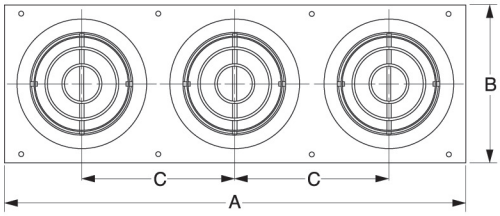

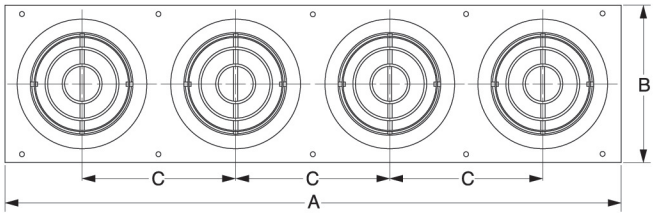

MODEL	DUCT SIZE W x H	NT SIZE x QTY.	A	B	C
NT 4-2P	13 ½ x 6	NT 4 x 2	15	7 ½	7 ½
NT 4-3P	21 x 6	NT 4 x 3	22 ½	7 ½	7 ½
NT 4-4P	28 ½ x 6	NT 4 x 4	30	7 ½	7 ½
NT 6-2P	17 ½ x 8	NT 6 x 2	19	9 ½	9 ½
NT 6-3P	27 x 8	NT 6 x 3	28 ½	9 ½	9 ½
NT 6-4P	36 ½ x 8	NT 6 x 4	38	9 ½	9 ½
NT 8-2P	22 x 10	NT 8 x 2	24	12	12
NT 8-3P	34 x 10	NT 8 x 3	36	12	12
NT 8-4P	46 x 10	NT 8 x 4	48	12	12
NT 10-2P	26 x 12	NT 10 x 2	28	14	14
NT 10-3P	40 x 12	NT 10 x 3	42	14	14
NT 10-4P	54 x 12	NT 10 x 4	56	14	14
NT 12-2P	31 x 14	NT 12 x 2	34	17	17
NT 12-3P	48 x 14	NT 12 x 3	51	17	17
NT 12-4P	65 x 14	NT 12 x 4	68	17	17
NT 14-2P	35 x 16	NT 14 x 2	38	19	19
NT 14-3P	54 x 16	NT 14 x 3	57	19	19
NT 14-4P	73 x 16	NT 14 x 4	76	19	19
NT 16-2P	39 x 18	NT 16 x 2	42	21	21
NT 16-3P	60 x 18	NT 16 x 3	63	21	21
NT 16-4P	81 x 18	NT 16 x 4	84	21	21

Product information is subject to change without notice. All dimensions in inches.

Aluminum TurboNozzle
Performance Data

Model: **NT**

SIZE	Nozzle Velocity (fpm)		300		400		500		600		700		800		1000		1200		1400	
	Velocity Pressure (in.,wg)		0.006		0.010		0.016		0.022		0.031		0.040		0.062		0.090		0.122	
	Deflection		0	22.5	0	22.5	0	22.5	0	20.5	0	22.5	0	22.5	0	22.5	0	22.5	0	22.5
4	Neck Area 0.087 sq.ft	CFM	30		40		50		60		70		80		90		110		130	
		SP(in.,wg.)	-	-	-	-	0.030	0.060	0.048	0.065	0.065	0.100	0.085	0.120	0.110	0.150	0.132	0.220	0.225	0.300
		NC	-	-	-	-	-	-	15	19	20	24	22	28	30	31	32	36	37	38
		Throw(ft.)	9	8	10	8	11	9	12	10	13	11	14	12	14	13	15	14	16	15
6	Neck Area 0.196 sq.ft	CFM	60		80		100		120		140		160		200		240		280	
		SP(in.,wg.)	-	0.02	-	0.03	0.020	0.050	0.030	0.050	0.050	0.062	0.045	0.075	0.074	0.128	0.120	0.200	0.170	0.290
		NC	-	-	-	-	-	-	-	-	-	17	15	20	22	28	29	34	34	41
		Throw(ft.)	10	8	12	10	15	12	26	15	16	13	19	18	21	20	24	22	26	23
8	Neck Area 0.349 sq.ft	CFM	110		140		180		210		250		280		350		420		490	
		SP(in.,wg.)	-	-	0.010	0.020	0.020	0.030	0.024	0.040	0.040	0.060	0.055	0.100	0.090	0.120	0.150	0.210	0.220	0.300
		NC	-	-	-	18	-	18	15	18	20	21	22	26	25	32	27	33	35	40
		Throw(ft.)	14	12	18	17	20	18	22	20	24	21	26	23	28	25	30	27	32	28
10	Neck Area 0.545 sq.ft	CFM	170		220		280		330		390		440		550		660		770	
		SP(in.,wg.)	-	-	-	0.020	0.010	0.030	0.018	0.040	0.030	0.050	0.040	0.062	0.054	0.091	0.076	0.130	0.100	0.240
		NC	-	-	-	-	-	15	-	20	20	22	15	16	24	18	25	32	34	38
		Throw(ft.)	21	18	24	20	26	21	28	24	30	27	32	28	34	31	38	33	40	35
12	Neck Area 0.785 sq.ft	CFM	240		320		400		480		550		630		790		950		1100	
		SP(in.,wg.)	-	-	-	0.010	-	0.025	0.035	0.040	0.040	0.050	0.050	0.100	0.050	0.090	0.060	1.100	0.100	0.200
		NC	-	-	-	-	-	-	-	-	-	20	18	22	22	32	31	38	35	42
		Throw(ft.)	25	21	27	23	28	26	31	28	34	31	35	32	41	38	42	40	43	41
14	Neck Area 1.069 sq.ft	CFM	330		430		540		650		750		860		1070		1290		1500	
		SP(in.,wg.)	-	-	-	-	-	0.026	0.030	0.041	0.028	0.040	0.030	0.050	0.040	0.060	0.050	0.100	0.150	0.250
		NC	-	-	-	-	-	-	-	15	15	21	16	29	24	30	29	34	36	40
		Throw(ft.)	27	23	30	26	33	31	37	33	40	36	41	39	43	41	52	46	59	50
16	Neck Area 1.396 sq.ft	CFM	420		560		700		840		980		1120		1400		1680		1960	
		SP(in.,wg.)	-	-	-	-	-	0.030	0.022	0.038	0.033	0.022	0.040	0.030	0.050	0.041	0.060	0.070	0.070	0.085
		NC	-	-	-	-	-	-	-	-	-	15	-	17	23	26	30	33	35	38
		Throw(ft.)	30	27	34	32	38	36	41	39	43	41	46	43	54	48	62	54	70	60
20	Neck Area 2.182 sq.ft	CFM	660		880		1100		1310		1530		1750		2190		2620		3060	
		SP(in.,wg.)	-	-	-	-	-	0.03	0.02	0.03	0.03	0.04	0.04	0.05	0.06	0.07	0.10	0.11	0.12	014
		NC	-	-	-	-	-	-	-	15	-	15	17	25	26	32	30	35	36	42
		Throw(ft.)	40	37	45	41	46	45	53	48	57	53	63	56	71	63	80	79	88	72
24	Neck Area 3.142 sq.ft	CFM	950		1260		1580		1890		2200		2520		3150		3780		4400	
		SP(in.,wg.)	-	-	-	-	-	0.03	0.02	0.02	0.03	0.04	0.04	0.05	0.06	0.07	0.09	1.10	0.12	0.13
		NC	-	-	-	-	-	-	-	15	15	22	19	27	24	33	32	37	38	44
		Throw(ft.)	46	44	52	48	57	53	62	57	67	62	73	67	83	76	93	85	104	95

THE THROW VALUES ARE BASED ON A 50 FPM TERMINAL VELOCITY.
DASHED LINE IN SP BOX INDICATES STATIC PRESSURE IS LESS THAN 0.01 IN.W.G.
DASHED LINE IN NC BOX INDICATES NOISE LEVEL IS LESS THAN 20.
NC LEVEL IS BASED ON 10dB ROOM ATTENUATION(PWL RE:10-12 WATTS) WITH ONE DIFFUSER OPERATING.

SIZE	Nozzle Area		250	500	750	1000	1250	1500
	Velocity Pressure (in.,wg)		0.004	0.016	0.035	0.035	0.097	0.140
	Total Pressure		0.023	0.058	0.115	0.167	0.257	0.333
4	Neck Area 0.062 sq.ft	CFM	20	40	50	70	80	100
		NC	-	-	-	-	15	16
		Throw	9	11	15	17	18	20
6	Neck Area 0.144 sq.ft	CFM	40	80	110	150	180	220
		NC	-	-	-	-	15	16
		Throw	12	16	20	22	24	27
8	Neck Area 0.27 sq.ft	CFM	70	140	210	270	340	410
		NC	-	-	-	-	15	16
		Throw	12	19	23	26	29	33
10	Neck Area 0.43 sq.ft	CFM	110	220	330	430	540	650
		NC	-	-	-	-	15	16
		Throw	13	21	25	29	33	36
12	Neck Area 0.632 sq.ft	CFM	160	320	480	640	790	950
		NC	-	-	-	-	15	16
		Throw	15	23	28	31	35	40
14	Neck Area 0.86 sq.ft	CFM	220	430	650	860	1080	1290
		NC	-	-	-	-	15	16
		Throw	16	23	29	33	38	45
16	Neck Area 1.156 sq.ft	CFM	290	580	870	1160	1450	1740
		NC	-	-	-	-	14	16
		Throw	16	23	28	34	37	42
20	Neck Area 1.88 sq.ft	CFM	470	940	1410	1880	2350	2820
		NC	-	-	-	-	15	16
		Throw	17	23	27	33	36	42
24	Neck Area 2.7 sq.ft	CFM	680	1350	2030	2700	3380	4050
		NC	-	-	-	-	15	16
		Throw	17	22	28	33	36	44

THE THROW VALUES ARE BASED ON A 50 FPM TERMINAL VELOCITY.
DASHED LINE IN SP BOX INDICATES STATIC PRESSURE IS LESS THAN 0.01 IN.W.G.
DASHED LINE IN NC BOX INDICATES NOISE LEVEL IS LESS THAN 20.
NC LEVEL IS BASED ON 10dB ROOM ATTENUATION(PWL RE:10-12 WATTS) WITH ONE DIFFUSER OPERATING.

Aluminum TurboNozzles

Model: **NTX & NTX-R**

Model: **NTX**
(Surface Mounted)

Model: **NTX-R**
(Exposed Duct Mounted)

Seiho's Model NTX Surface Mounted Aluminum TurboNozzle and NTX-R Exposed Duct Mounted Aluminum TurboNozzle offers excellent architectural styling for directional control in supply applications. While the NTX is specially designed for a flush flange mounting to wall and ceiling construction, the NTX-R is designed for direct mounting to exposed, round sheet metal (spiral or k-d) duct work. Both models provide an integral, readily-accessible airflow adjustment in its installed position. The NTX and NTX-R differ from the NT in their mounting configuration and the nozzle position. They use a shallower flange and the nozzle protrudes from the flange. The heavy-gauge anodized, aluminum and stainless steel construction is corrosion-resistant for years of service. The aluminum finish integrates seamlessly with the galvanized finish of exposed duct systems.

MATERIAL	FINISH
• Aluminum	• Clear Anodized • Custom Colors Available

FEATURES

- Economical
- High Airflow Capacity
- Long Throw Capacity
- Infinitely Adjustable 2-Axis Core for Directional Control
- Anodized Aluminum Body and Stainless Steel Construction
- Surface (NTX) or Exposed Duct (NTX-R) Mounted
- Horizontal Throw
- Vertical Throw Applications by Factory Selection
- Mounting Screw Fastening System

MODEL NTX DIMENSIONS

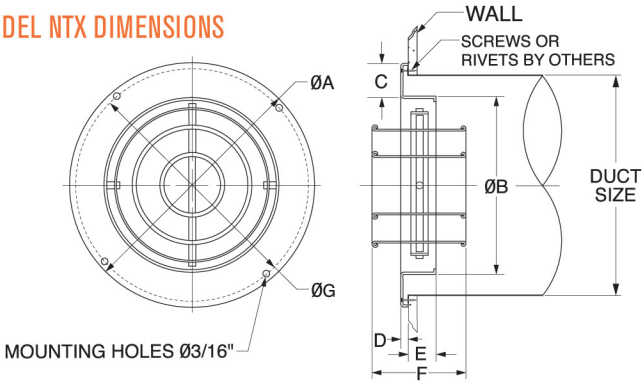

Note: The nominal size (Measurement B) of NTX is 2" smaller than the duct size it mounts to.
(Ex. NTX6 is designed to fit a 8" duct.)

MODEL	DUCT SIZE	A	B	C	D	E	E	G
NTX 4	6	8	4	2	3/8	1 5/8	2	7
NTX 6	8	10	6	2	3/8	1 5/8	3 7/32	9
NTX 8	10	12	8	2	3/8	1 5/8	4 1/4	11
NTX10	12	14	10	2	3/8	1 5/8	5 9/32	13
NTX12	14	16	12	2	3/8	1 5/8	5 7/32	15
NTX14	16	18	14	2	3/8	1 5/8	5 7/32	17
NTX16	18	20	16	3	3/8	1 5/8	5 7/32	19
NTX20	22	24	20	1	3/8	2 5/8	7 3/16	23
NTX24	26	28	24	2	3/8	2 5/8	7 3/16	27

Product information is subject to change without notice. All dimensions in inches.

MODEL NTX-R DIMENSIONS

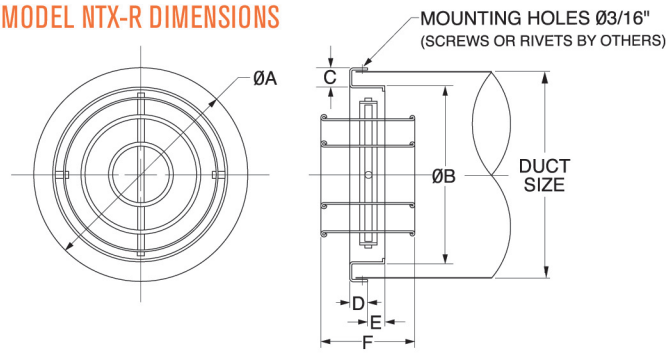

Note: The nominal size (Measurement B) of NTX-R is 2" smaller than the duct size it mounts to.
(Except for NTX20R & NTX24R: 4" smaller than duct.)

MODEL	DUCT SIZE	A	B	C	D	E	F
NTX 4R	6	6 1/4	4	1 3/16	1	1	2
NTX 6R	8	8 1/4	6	1 3/16	1	1	3 7/32
NTX 8R	10	10 1/4	8	1 3/16	1	1	4 1/4
NTX10R	12	12 1/4	10	1 3/16	1	1	5 9/32
NTX12R	14	14 1/4	12	1 3/16	1	1	5 7/32
NTX14R	16	16 1/4	14	1 3/16	1	1	5 7/32
NTX16R	18	18 1/4	16	1 3/16	1	1	5 7/32
NTX20R	24	24 1/4	20	4 3/8	1 1/2	1 1/2	7 3/16
NTX24R	28	28 1/4	24	4 3/8	1 1/2	1 1/2	7 3/16

Product information is subject to change without notice. All dimensions in inches.

SIZE	Nozzle Velocity (fpm)		300		400		500		600		700		800		1000		1200		1400	
	Velocity Pressure (in.,wg)		0.006		0.010		0.016		0.022		0.031		0.040		0.062		0.090		0.122	
	Deflection		0	22.5	0	22.5	0	22.5	0	20.5	0	22.5	0	22.5	0	22.5	0	22.5	0	22.5
4	Neck Area 0.077 sq.ft	CFM	30		40		50		60		70		80		90		110		130	
		SP(in.,wg.)	-	-	-	-	0.023	0.047	0.037	0.050	0.050	0.078	0.066	0.093	0.085	0.116	0.100	0.170	0.174	0.232
		NC	-	-	-	-	-	-	14	20	19	23	21	27	29	30	31	35	36	37
		Throw(ft.)	8	7	9	7	10	8	11	9	11	10	12	10	12	11	13	12	14	13
6	Neck Area 0.180 sq.ft	CFM	60		80		90		110		130		150		180		220		260	
		SP(in.,wg.)	-	0.02	-	0.02	0.013	0.039	0.023	0.039	0.029	0.048	0.033	0.058	0.057	0.100	0.093	0.155	0.132	0.244
		NC	-	-	-	-	-	-	-	-	-	16	-	19	21	27	28	33	33	40
		Throw(ft.)	9	7	11	9	13	11	14	13	14	11	11	17	16	18	21	19	23	20
8	Neck Area 0.349 sq.ft	CFM	100		140		170		200		230		270		330		400		460	
		SP(in.,wg.)	-	-	0.008	0.016	0.016	0.024	0.019	0.032	0.040	0.047	0.044	0.080	0.071	0.095	0.120	0.166	0.170	0.240
		NC	-	-	-	17	-	17	15	17	19	20	21	25	24	31	26	32	34	39
		Throw(ft.)	13	11	16	15	18	16	20	18	21	19	23	21	25	22	26	24	28	25
10	Neck Area 0.545 sq.ft	CFM	160		210		260		310		360		410		510		610		710	
		SP(in.,wg.)	-	-	-	0.017	0.009	0.026	0.015	0.034	0.026	0.043	0.034	0.053	0.046	0.077	0.065	0.110	0.085	0.200
		NC	-	-	-	-	-	15	-	19	19	21	15	16	23	27	24	31	33	37
		Throw(ft.)	19	16	22	18	24	19	26	22	27	25	29	26	31	28	35	30	36	32
12	Neck Area 0.785 sq.ft	CFM	230		300		370		450		520		590		740		890		1030	
		SP(in.,wg.)	-	-	-	0.009	-	0.023	0.032	0.037	0.037	0.046	0.046	0.053	0.047	0.083	0.055	0.093	0.093	0.160
		NC	-	-	-	-	-	-	-	-	-	19	17	21	21	31	30	37	34	41
		Throw(ft.)	24	20	26	22	27	25	30	27	32	30	33	30	39	36	40	38	41	39
14	Neck Area 1.069 sq.ft	CFM	310		410		510		610		710		810		1010		1220		1420	
		SP(in.,wg.)	-	-	-	-	-	0.024	0.028	0.039	0.026	0.038	0.028	0.047	0.038	0.056	0.047	0.094	0.141	0.235
		NC	-	-	-	-	-	-	-	15	15	20	15	28	23	29	28	33	35	40
		Throw(ft.)	26	22	29	25	32	30	36	32	38	35	39	37	41	40	50	44	57	48
16	Neck Area 1.396 sq.ft	CFM	400		540		670		800		930		1070		1330		1600		1860	
		SP(in.,wg.)	-	-	-	-	-	0.030	0.021	0.032	0.031	0.038	0.038	0.037	0.047	0.038	0.056	0.066	0.066	0.080
		NC	-	-	-	-	-	-	-	-	-	15	-	16	22	25	29	32	34	37
		Throw(ft.)	29	26	33	31	36	35	39	37	41	39	44	41	52	46	59	52	67	58
20	Neck Area 2.182 sq.ft	CFM	660		880		1100		1310		1530		1750		2190		2620		3060	
		SP(in.,wg.)	-	-	-	-	-	0.03	0.02	0.03	0.03	0.04	0.04	0.05	0.06	0.07	0.10	0.11	0.12	014
		NC	-	-	-	-	-	-	-	15	-	15	17	25	26	32	30	35	36	42
		Throw(ft.)	40	37	45	41	46	45	53	48	57	53	63	56	71	63	80	79	88	72
24	Neck Area 3.142 sq.ft	CFM	950		1260		1580		1890		2200		2520		3150		3780		4400	
		SP(in.,wg.)	-	-	-	-	-	0.03	0.02	0.02	0.03	0.04	0.04	0.05	0.06	0.07	0.09	0.10	0.12	0.13
		NC	-	-	-	-	-	-	-	15	15	22	19	27	24	33	32	37	38	44
		Throw(ft.)	46	44	52	48	57	53	62	57	67	62	73	67	83	76	93	85	104	95

THE THROW VALUES ARE BASED ON A 50 FPM TERMINAL VELOCITY.
DASHED LINE IN SP BOX INDICATES STATIC PRESSURE IS LESS THAN 0.01 IN.W.G.
DASHED LINE IN NC BOX INDICATES NOISE LEVEL IS LESS THAN 20.
NC LEVEL IS BASED ON 10dB ROOM ATTENUATION(PWL RE:10-12 WATTS) WITH ONE DIFFUSER OPERATING.

Aluminum Reversible TurboNozzle

Model: **NX**

Model: **NX**

MATERIAL
- Aluminum

FINISH
- Clear Anodized
- Custom Colors Available

Seiho is pleased to announce the addition of the Aluminum Reversible TurboNozzle, model NX, to its popular TurboNozzle lineup. The versatile Model NX utilizes a distinctive cone design - by rotating the inner cones, it provides the effective selection of narrow or wide jet air pattern as well as adjustment of direction. The aluminum and stainless steel design contribute to the NX's light weight so much so that it is easily installed and held in place by strong spring clips. No unsightly screws are necessary!*

*Note: The model NX is designed for wall mounting. Screws must be used for ceiling mounting.

FEATURES

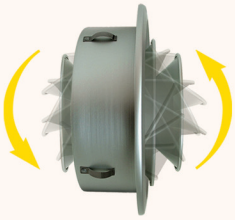

- Reversible Center Cones for Narrow or Wide Jet Air Pattern
- Infinitely Adjustable 2-Axis Core for Directional Control
- Long Throw Capability
- Anodized Aluminum Body and Stainless Steel Construction
- Available for Standard Duct Sizes
- Horizontal Throw
- Concealed, Spring Clip, Fastening Mechanism

AIRFLOW SMOKE PATTERNS

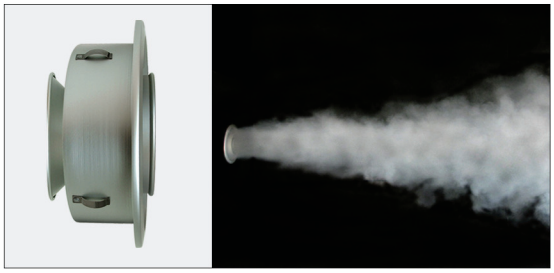

- Straight Pattern

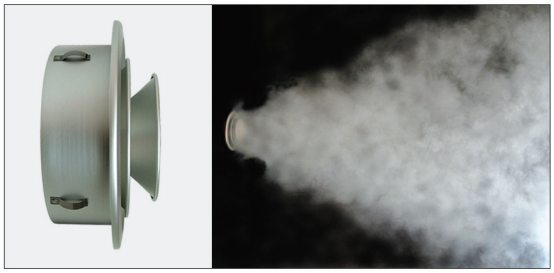

- Diffusing Pattern

MODEL NX DIMENSIONS

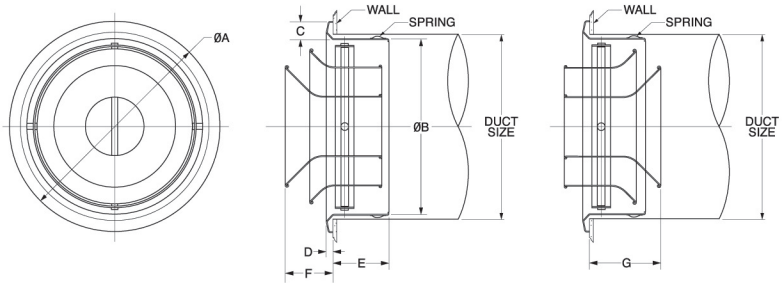

MODEL	DUCT SIZE	A	B	C	D	E	F	G
NX 6	6	7 13/32	5 17/32	1	3/8	2 1/2	1 1/8	2 1/2
NX 8	8	9 13/32	7 1/2	1	3/8	2 1/2	1 13/16	3 1/16
NX10	10	11 3/8	9 15/32	1	3/8	3	2 9/16	3 13/16
NX12	12	13 11/32	11 15/32	1	3/8	3	3 3/16	4 7/16
NX14	14	15 5/16	13 7/16	1	3/8	4	3 25/32	5 1/32
NX16	16	17 9/32	15 13/32	1	3/8	4	4 11/32	5 19/32

Product information is subject to change without notice. All dimensions in inches.

MATERIAL
- TurboNozzle - Aluminum
- Plate - Stainless Steel (304)

FINISH
- TurboNozzle - Clear Anodized
- Plate - Brushed
- Custom Colors Available

Model: NX-P

The new NX Reversible TurboNozzle is now available in a panel mounted design. Select from one, two, three, or four NX's per panel. Perfect for retro-fitting an existing air grilles, or for new construction. For wall or ceiling mounting. Construction consists of stainless steel and heavy gauge aluminum. Finishes are clear anodized nozzle with brushed panel. Custom size panels are available. Made in U.S.A.

MODEL NX-P DIMENSIONS

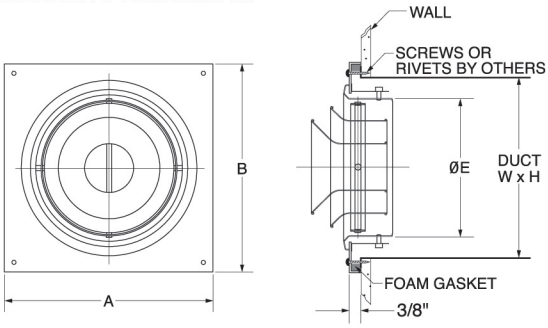

MODEL	DUCT SIZE SQUARE W x H	DUCT SIZE ROUND (Ø) INCHES	A	B	E
NX 6P	8 x 8	8	9 ½	9 ½	6
NX 8P	10 x 10	10	12	12	8
NX 10P	12 x 12	12	14	14	10
NX 12P	14 x 14	14	17	17	12
NX 14P	16 x 16	16	19	19	14
NX 16P	18 x 18	18	21	21	16

Product information is subject to change without notice. All dimensions in inches.

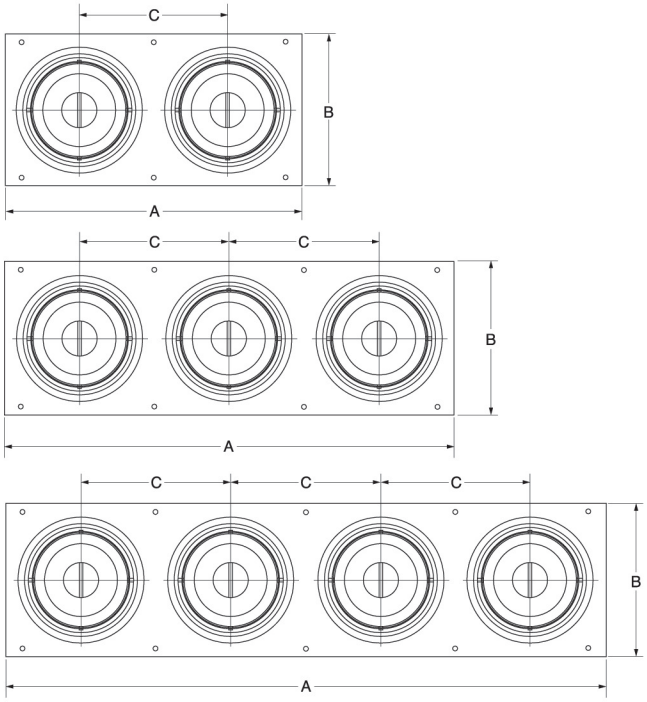

MODEL	DUCT SIZE W x H	NX SIZE x QTY.	A	B	C
NX 6-2P	17 ½ x 8	NX 6 x 2	19	9 ½	9 ½
NX 6-3P	27 x 8	NX 6 x 3	28 ½	9 ½	9 ½
NX 6-4P	36 ½ x 8	NX 6 x 4	38	9 ½	9 ½
NX 8-2P	22 x 10	NX 8 x 2	24	12	12
NX 8-3P	34 x 10	NX 8 x 3	36	12	12
NX 8-4P	46 x 10	NX 8 x 4	48	12	12
NX 10-2P	26 x 12	NX 10 x 2	28	14	14
NX 10-3P	40 x 12	NX 10 x 3	42	14	14
NX 10-4P	54 x 12	NX 10 x 4	56	14	14
NX 12-2P	31 x 14	NX 12 x 2	34	17	17
NX 12-3P	48 x 14	NX 12 x 3	51	17	17
NX 12-4P	65 x 14	NX 12 x 4	68	17	17
NX 14-2P	35 x 16	NX 14 x 2	38	19	19
NX 14-3P	54 x 16	NX 14 x 3	57	19	19
NX 14-4P	73 x 16	NX 14 x 4	76	19	19
NX 16-2P	39 x 18	NX 16 x 2	42	21	21
NX 16-3P	60 x 18	NX 16 x 3	63	21	21
NX 16-4P	81 x 18	NX 16 x 4	84	21	21

Product information is subject to change without notice. All dimensions in inches.

Aluminum Reversible TurboNozzle
Performance Data

Model: **NX**

SIZE	Nozzle Velocity (fpm)		300			400			500			600			700			800			1000			1200			1400			1600		
	Velocity Pressure (in.,wg)		0.006			0.010			0.016			0.022			0.031			0.040			0.062			0.090			0.122			0.160		
	Terminal Velocity		50	100	150	50	100	150	50	100	150	50	100	150	50	100	150	50	100	150	50	100	150	50	100	150	50	100	150	50	100	150
6	Neck Area 0.196 sq.ft	CFM	60			80			100			120			140			160			200			240			280			310		
		SP(in.,wg) / Diffused	0.01			0.02			0.03			0.04			0.05			0.07			0.1			0.14			0.19			0.25		
		SP(in.,wg) / Straight	0.03			0.05			0.03			0.11			0.15			0.2			0.3			0.44			0.6			0.73		
		NC / Diffused	-			-			-			-			-			-			24			31			36			39		
		NC / Straight	-			-			-			24			27			29			36			42			49			> 50		
		Throw(ft.) / Diffused	10	<2	<2	12	3	2	14	6	4	16	8	6	17	10	7	18	12	8	20	15	10	21	17	11	22	19	12	23	20	13
		Throw(ft.) / Straight	23	13	9	28	18	12	32	22	14	35	25	16	38	28	18	40	30	19	44	33	21	48	37	23	51	39	25	52	41	26
8	Neck Area 0.349 sq.ft	CFM	110			140			180			210			250			280			350			420			490			560		
		SP(in.,wg) / Diffused	0.03			0.05			0.08			0.10			0.15			0.19			0.29			0.42			0.57			0.74		
		SP(in.,wg) / Straight	0.09			0.15			0.24			0.33			0.47			0.59			0.92			1.32			1.80			2.35		
		NC / Diffused	-			-			-			-			-			-			24			30			36			40		
		NC / Straight	-			-			-			24			29			32			38			43			48			> 50		
		Throw(ft.) / Diffused	13	4	3	17	7	5	21	11	7	24	13	8	27	15	9	29	17	10	32	20	12	35	22	14	38	24	15	40	26	16
		Throw(ft.) / Straight	29	24	12	33	29	14	38	33	16	41	36	17	44	39	18	46	41	19	50	45	20	54	48	21	56	51	23	59	53	24
10	Neck Area 0.545 sq.ft	CFM	170			220			280			330			390			440			550			660			770			870		
		SP(in.,wg) / Diffused	0.01			0.02			0.03			0.04			0.05			0.07			0.11			0.16			0.21			0.27		
		SP(in.,wg) / Straight	0.07			0.12			0.20			0.27			0.38			0.48			0.76			1.09			1.48			1.89		
		NC / Diffused	-			-			-			-			-			-			22			30			36			40		
		NC / Straight	-			-			-			21			27			31			39			46			> 50			> 50		
		Throw(ft.) / Diffused	14	6	3	20	9	6	26	12	9	30	15	11	34	17	14	37	18	14	43	21	17	47	24	19	51	26	20	54	28	22
		Throw(ft.) / Straight	36	22	14	42	27	16	49	31	19	53	34	20	58	37	23	61	39	23	67	42	25	71	46	27	76	48	29	79	50	30
12	Neck Area 0.785 sq.ft	CFM	240			320			400			480			550			630			790			950			1100			1260		
		SP(in.,wg) / Diffused	0.01			0.02			0.03			0.05			0.06			0.08			0.13			0.19			0.25			0.33		
		SP(in.,wg) / Straight	0.06			0.11			0.16			0.23			0.30			0.40			0.62			0.90			1.21			1.59		
		NC / Diffused	-			-			-			-			-			-			24			31			37			43		
		NC / Straight	-			-			-			25			30			36			45			> 50			> 50			> 50		
		Throw(ft.) / Diffused	20	8	5	23	12	8	26	15	11	32	15	13	35	20	15	38	22	16	43	25	19	46	27	21	51	29	23	55	31	25
		Throw(ft.) / Straight	41	25	15	48	30	18	50	34	20	59	37	22	63	40	23	67	42	25	72	45	27	77	49	28	81	51	30	85	53	31
14	Neck Area 1.069 sq.ft	CFM	330			430			540			650			750			860			1070			1290			1500			1695		
		SP(in.,wg) / Diffused	0.01			0.02			0.03			0.04			0.05			0.07			0.10			0.15			0.20			0.26		
		SP(in.,wg) / Straight	0.06			0.11			0.17			0.24			0.32			0.42			0.65			0.95			1.28			1.64		
		NC / Diffused	-			-			-			-			-			-			24			32			38			43		
		NC / Straight	-			-			20			27			32			37			46			> 50			> 50			> 50		
		Throw(ft.) / Diffused	23	12	6	27	16	9	31	20	12	34	23	14	37	26	16	39	28	17	43	32	20	46	35	22	53	37	24	56	39	25
		Throw(ft.) / Straight	47	28	16	54	33	19	60	37	21	65	40	23	68	42	24	72	44	26	78	48	28	83	51	29	87	54	31	90	56	32
16	Neck Area 1.396 sq.ft	CFM	420			560			700			840			980			1120			1400			1680			1960			2240		
		SP(in.,wg) / Diffused	0.01			0.02			0.02			0.04			0.05			0.06			0.10			0.14			0.20			0.25		
		SP(in.,wg) / Straight	0.06			0.10			0.16			0.23			0.31			0.40			0.63			0.90			1.23			1.61		
		NC / Diffused	-			-			-			-			-			21			29			36			41			46		
		NC / Straight	-			-			20			27			34			39			49			> 50			> 50			> 50		
		Throw(ft.) / Diffused	24	13	6	28	15	8	33	19	10	37	21	12	40	24	14	43	26	15	48	29	17	51	32	19	55	35	20	57	39	26
		Throw(ft.) / Straight	49	30	17	56	34	20	66	39	22	69	41	24	71	43	25	74	45	27	82	50	29	85	52	30	89	56	32	92	58	33

TESTED IN ACCORDANCE WITH ASHRAE 70-2006 STANDARD.
THROW VALUES GIVEN ARE FOR TERMINAL VELOCITIES OF 50, 100 AND 150 FPM AND FOR ISOTHERMAL CONDITIONS.
STATIC PRESSURE (SP) ARE IN INCHES OF WATER GAUGE REQUIRED.
NOISE CRITERIA: NC LEVEL IS BASED ON ROOM ATTENUATION OF 10 DB (SOUND POWER LEVEL RE: 10-12 WATTS) WITH ONE DIFFUSER OPERATING.
TERMINAL VELOCITY: MAXIMUM VELOCITY [VT] IN FEET PER MINUTE AT THE SPEFICIFED DISTANCE FROM THE OUTLET FACE.
DASH LINE [-] IN NC BOX DENOTES AN NC VALUE OF LESS THAN 20.
STATIC PRESSURE, NOISE CRITERIA AND THROW VALUES REPRESENTED IN TWO POSITIONS: DIFFUSED AIR PATTERN POSITION AND STRAIGHT PATTERN POSITION.


AIR FORCE ONE DISCOVERY CENTER
SOUVENIR PHOTOS
ONE STORE
RONALD


BURRITOS, TACOS & SALADS
BURRITO 450-930*
BOWL 160-640*
TACOS 320-670*
SALAD 170-780*
CHICKEN 5.95
STEAK 6.35
CARNITAS 6.35
BARBACOA 6.35
VEGETARIAN 5.95
*Calorie Range
WHAT GOES INSIDE
CILANTRO-LIME RICE 100*
BLACK OR PINTO BEANS 120*
SALSA 15-60*
CHEESE OR SOUR CREAM 100-120*
GUACAMOLE (add 1.00) 150*
*Calorie Range
6.35
625 Calories
Chips 370*
*Calorie Range

Model: **RHV**

The model RHV Double Deflection Diffuser offers a double deflection design in a round shape. Excellent for ceiling and wall mounting, it can provide wide dispersion or narrow air streams. The individually adjustable blades allow the user to condition four areas simultaneously. The body is one piece aluminum and mounts with the included hidden bracket. Finally a register good looking enough for those special projects!

MATERIAL	FINISH
• Aluminum	• Gloss White or Mill Finish • Custom Colors Available

FEATURES

- Contemporary Design
- Long Throw Capacity
- Double Deflection Design
- Concealed Mounting Mechanism
- Available for Standard Duct Sizes
- Heavy Gauge Aluminum Body
- Wide Dispersion Patterns
- Extruded Aluminum Airfoil Blades

MODEL RHV DIMENSIONS

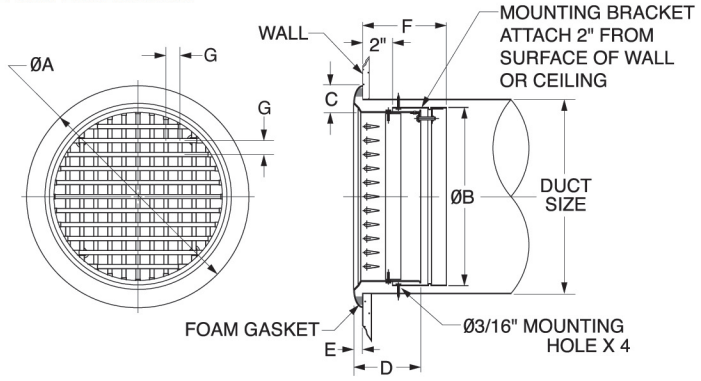

MODEL	DUCT SIZE	A	B	C	D	E	F	G
RHV 6	6	7 5/8	5 13/16	1 7/32	4 9/32	15/32	5 1/2	21/32
RHV 8	8	10	7 25/32	1 13/32	4 9/32	15/32	5 1/2	23/32
RHV10	10	12 5/8	9 3/4	1 25/32	4 13/32	19/32	5 1/2	29/32
RHV12	12	14 19/32	11 23/32	1 25/32	4 13/32	19/32	5 1/2	15/16
RHV14	14	16 9/16	13 11/16	1 25/32	4 13/32	19/32	5 1/2	15/16
RHV16	16	18 17/32	15 21/32	1 25/32	4 13/32	19/32	5 1/2	31/32
RHV20	20	23 5/8	19 23/32	2 3/8	4 31/32	29/32	6 11/16	31/32
RHV24	24	27 9/16	23 11/16	2 3/8	4 31/32	29/32	6 11/16	31/32

Product information is subject to change without notice. All dimensions in inches.

Double Deflection Round Grille
Performance Data

Model: **RHV**

SEIHO
www.seiho.com

SIZE	Neck Velocity (fpm)		300			400			500			600			700			800			1000			1200			1400		
	Velocity Pressure (in.,wg)		0.006			0.010			0.016			0.022			0.031			0.040			0.062			0.090			0.122		
	Deflection		0	22.5°	45°	0	22.5°	45°	0	22.5°	45°	0	22.5°	45°	0	22.5°	45°	0	22.5°	45°	0	22.5°	45°	0	22.5°	45°	0	22.5°	45°
6	Neck Area 0.196 sq.ft	CFM	60			80			100			120			140			160			200			240			280		
		SP(in.,wg)	0.014	0.033	0.040	0.025	0.056	0.070	0.040	0.090	0.110	0.060	0.110	0.170	0.110	0.150	0.240	0.135	0.180	0.300	0.180	0.270	0.440	0.280	0.430	0.690	0.400	0.610	0.720
		NC	-	-	-	-	-	-	-	-	22	-	20	20	-	23	26	20	28	35	24	34	40	32	40	47	37	43	
		Throw(ft.)	13	13	10	20	16	13	25	20	15	32	26	20	40	35	25	43	37	28	55	45	35	60	55	45	80	70	55
8	Neck Area 0.349 sq.ft	CFM	110			140			180			210			250			280			350			420			-		
		SP(in.,wg)	0.014	0.029	0.030	0.026	0.049	0.056	0.037	0.065	0.156	0.048	0.082	0.097	0.075	0.125	0.150	0.110	0.175	0.220	0.153	0.230	0.290	0.255	0.420	0.470			
		NC	-	-	-	-	18	19	-	18	25	15	18	20	20	21	25	22	26	30	25	32	33	33	40	42			
		Throw(ft.)	20	17	12	27	22	18	31	26	20	35	30	22	35	27	22	55	45	33	60	51	39	80	60	50			
10	Neck Area 0.545 sq.ft	CFM	170			220			280			330			390			440			550			660			-		
		SP(in.,wg)	0.011	0.024	0.026	0.016	0.035	0.043	0.022	0.045	0.059	0.036	0.068	0.088	0.062	0.105	0.142	0.048	0.130	0.230	0.150	0.155	0.255	0.185	0.285	0.420			
		NC	-	-	-	-	-	-	-	15	19	-	20	21	20	22	25	15	21	37	25	25	33	26	33	40			
		Throw(ft.)	25	21	17	33	26	21	59	52	35	55	45	32	61	45	40	60	50	40	75	57	47	90	70	55			
12	Neck Area 0.785 sq.ft	CFM	240			320			400			480			550			630			790			950			1100		
		SP(in.,wg)	0.010	0.019	0.017	0.015	0.031	0.037	0.012	0.025	0.032	0.075	0.090	0.140	0.085	0.102	0.120	0.010	0.195	0.320	0.098	0.167	0.210	0.152	0.210	0.380	0.165	0.280	0.460
		NC	-	-	-	-	-	-	-	-	20	-	-	24	-	20	27	18	22	30	22	32	41	31	38	46	35	48	50
		Throw(ft.)	27	22	17	40	32	25	45	32	27	52	42	35	60	44	40	75	55	45	90	80	60	100	100	80	105	105	90
14	Neck Area 1.069 sq.ft	CFM	330			430			540			650			750			860			1070			1290			1500		
		SP(in.,wg)	0.010	0.020	0.030	0.020	0.030	0.050	0.020	0.040	0.070	0.040	0.050	0.090	0.050	0.070	0.120	0.060	0.100	0.180	0.080	0.120	0.220	0.110	0.170	0.300	0.180	0.260	0.470
		NC	-	-	-	-	-	15	-	-	21	-	15	23	15	21	21	16	29	34	24	30	41	29	34	33	37	45	48
		Throw(ft.)	30	25	20	40	32	25	55	45	30	65	52	37	75	57	45	81	65	51	102	84	60	106	92	75	110	100	90
16	Neck Area 1.396 sq.ft	CFM	420			560			700			840			980			1120			1400			1680			1960		
		SP(in.,wg)	0.010	0.030	0.050	0.020	0.040	0.070	0.040	0.070	0.120	0.050	0.060	0.130	0.060	0.080	0.140	0.050	0.080	0.160	0.080	0.130	0.170	0.110	0.210	0.350	0.170	0.270	0.400
		NC	-	-	-	-	-	21	-	-	21	-	15	23	-	21	32	19	27	34	24	33	43	32	41	48	37	45	48
		Throw(ft.)	25	25	20	41	32	26	60	46	34	73	55	41	80	65	50	90	82	65	105	100	80	120	110	100	100	82	60
20	Neck Area 2.182 sq.ft	CFM	660			880			1100			1310			1530			1750			2190			2620			3060		
		SP(in.,wg)	-	0.010	0.030	0.010	0.030	0.050	0.020	0.050	0.080	0.020	0.070	0.110	0.030	0.090	0.140	0.040	0.120	0.200	0.070	0.200	0.330	0.100	0.270	0.440	0.140	0.370	0.600
		NC	-	20	-	-	-	-	-	-	22	-	-	29	-	23	34	19	27	39	26	35	47	32	40	52	38	47	59
		Throw(ft.)	37	32	22	50	40	30	67	56	39	80	66	46	94	77	54	109	88	61	139	110	76	172	131	89	201	153	102
24	Neck Area 3.142 sq.ft	CFM	950			1260			1580			1890			2200			2520			3150			3780			4400		
		SP(in.,wg)	-	0.020	0.040	-	0.040	0.060	0.010	0.050	0.090	0.020	0.080	0.130	0.030	0.100	0.170	0.030	0.130	0.220	0.060	0.200	0.340	0.090	0.290	0.500	0.110	0.380	0.640
		NC	-	-	-	-	-	-	-	-	25	-	-	31	-	21	32	20	26	41	23	34	49	29	41	50	34	46	60
		Throw(ft.)	42	38	26	59	50	34	77	63	43	94	76	52	107	86	60	119	97	68	146	118	85	186	142	107	215	180	127

THE THROW VALUES ARE BASED ON A 50 FPM TERMINAL VELOCITY.
DASHED LINE IN SP BOX INDICATES STATIC PRESSURE IS LESS THAN 0.01 IN.W.G.
DASHED LINE IN NC BOX INDICATES NOISE LEVEL IS LESS THAN 20.
NC LEVEL IS BASED ON 10dB ROOM ATTENUATION(PWL RE:10-12 WATTS) WITH ONE DIFFUSER OPERATING.

Double Deflection Round Grilles

Model: **NR-B**

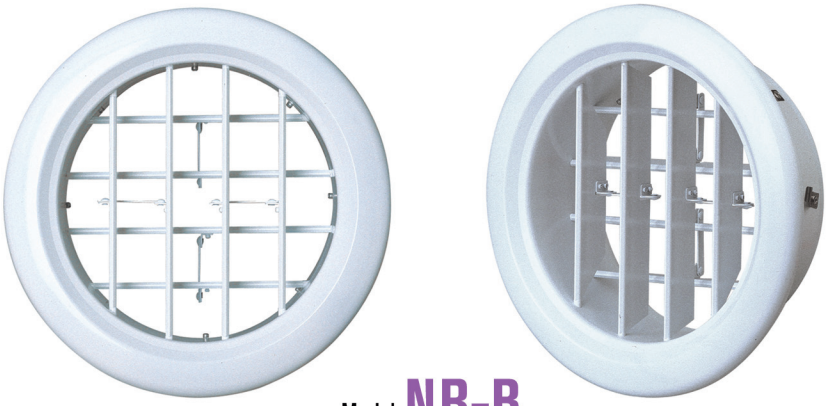

Model: **NR-B**

Seiho's model NR-B utilizes a widely-spaced blade design for high capacity, long throw air flow in a double deflection grille. The linked blades facilitate air direction control. The NR-B can be wall mounted securely with its mounting bracket. Excellent for use where high volume air streams are needed such as airport concourses, hotel lobbies, and convention halls.

MATERIAL	FINISH
• Aluminum	• Gloss White or Mill Finish • Custom Colors Available

FEATURES

- Contemporary Design
- Long Throw Capacity
- Double Deflection Design
- Concealed Mounting Mechanism
- Available for Standard Duct Sizes
- Heavy Gauge Aluminum Body
- Wide Dispersion Patterns
- Extruded Aluminum Airfoil Blades

MODEL NR-B DIMENSIONS

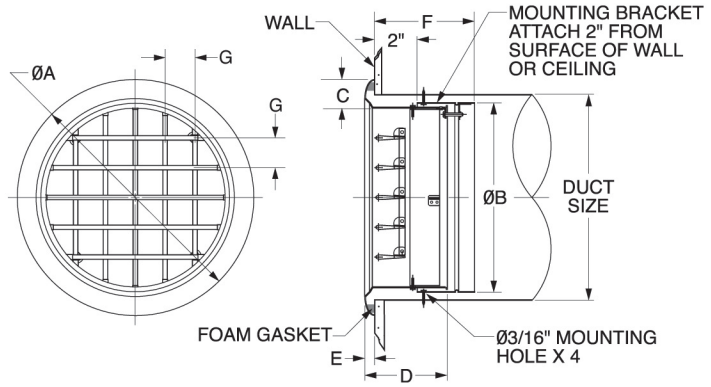

MODEL	DUCT SIZE	A	B	C	D	E	F	G
NR 6B	6	7 5/8	5 13/16	1 7/32	4 9/32	15/32	5 1/2	1 5/16
NR 8B	8	10	7 25/32	1 13/32	4 9/32	15/32	5 1/2	1 7/16
NR10B	10	12 5/8	9 3/4	1 25/32	4 13/32	19/32	5 1/2	1 7/8
NR12B	12	14 19/32	11 23/32	1 25/32	4 13/32	19/32	5 1/2	1 29/32
NR14B	14	16 9/16	13 11/16	1 25/32	4 13/32	19/32	5 1/2	1 29/32
NR16B	16	18 17/32	15 21/32	1 25/32	4 13/32	19/32	5 1/2	1 29/32
NR20B	20	23 5/8	19 23/32	2 3/8	4 31/32	29/32	6 11/16	1 29/32
NR24B	24	27 9/16	23 11/16	2 3/8	4 31/32	29/32	6 11/16	1 29/32

Product information is subject to change without notice. All dimensions in inches.

Double Deflection Round Grille
Performance Data

Model: **NR-B**

SEIHO
www.seiho.com

SIZE	Neck Velocity (fpm)		250		500		750		1000		1250		1500	
	Velocity Pressure (in.,wg)		0.004		0.016		0.035		0.062		0.097		0.140	
	Total Pressure		0.023	0.029	0.076	0.096	0.165	0.200	0.247	0.292	0.387	0.417	0.540	0.570
	Deflection		0	22.5	0	22.5	0	22.5	0	22.5	0	22.5	0	22.5
6	Neck Area 0.196 sq.ft	CFM	50		100		150		200		250		300	
		NC	-	-	-	-	-	20	24	34	32	40	37	43
		Throw(ft.)	10	9	13	12	17	15	19	17	22	19	24	22
8	Neck Area 0.349 sq.ft	CFM	90		180		270		350		440		530	
		NC	-	-	-	18	22	26	25	32	33	40		
		Throw(ft.)	13	12	18	17	22	20	25	23	27	25	31	28
10	Neck Area 0.545 sq.ft	CFM	140		280		410		550		690		820	
		NC	-	-	-	15	15	21	20	26	26	33		
		Throw(ft.)	16	14	23	20	28	25	31	28	36	32	36	33
12	Neck Area 0.785 sq.ft	CFM	200		400		590		790		990		1180	
		NC	-	-	-	-	16	22	22	32	31	38	35	48
		Throw(ft.)	19	17	27	24	32	30	38	34	41	39	43	41
14	Neck Area 1.069 sq.ft	CFM	270		540		810		1070		1340		1610	
		NC	-	-	-	-	16	29	24	32	29	34	37	45
		Throw(ft.)	22	21	32	28	38	35	44	40	49	44	54	47
16	Neck Area 1.396 sq.ft	CFM	350		700		1050		1400		1750		2100	
		NC	-	-	-	-	19	27	29	34	32	41	37	45
		Throw(ft.)	25	23	36	31	43	39	51	45	56	52	63	55
20	Neck Area 2.182 sq.ft	CFM	550		1100		1640		2190		2730		3280	
		NC	-	-	-	-	19	27	30	34	32	40	38	47
		Throw(ft.)	31	27	44	41	54	49	63	57	70	64	74	71
24	Neck Area 3.142 sq.ft	CFM	790		1580		2360		3150		3930		4720	
		NC	-	-	-	-	20	26	30	34	33	41	39	48
		Throw(ft.)	33	28	54	49	65	58	74	68	83	78	92	84

THE THROW VALUES ARE BASED ON A 50 FPM TERMINAL VELOCITY.
DASHED LINE IN SP BOX INDICATES STATIC PRESSURE IS LESS THAN 0.01 IN.W.G.
DASHED LINE IN NC BOX INDICATES NOISE LEVEL IS LESS THAN 20.
NC LEVEL IS BASED ON 10dB ROOM ATTENUATION(PWL RE:10-12 WATTS) WITH ONE DIFFUSER OPERATING.

Round Lattice Grille

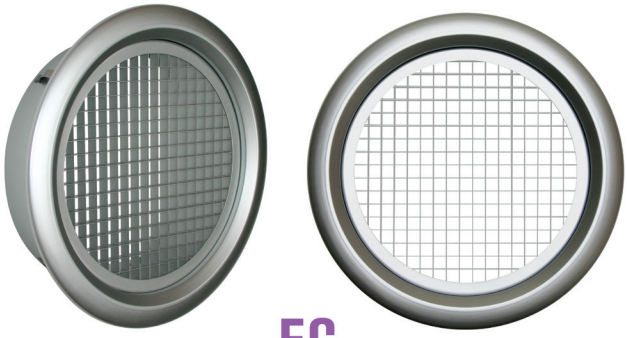

Model: **EC**

Model EC Round Lattice Grille is designed for use in residential and commercial applications. The model EC can be used for exhaust, return or supply applications with a low air resistance and low noise levels, and can be installed on a wall or mounted on ductwork with spring clip. The model EC is constructed of a heavy gauge aluminum frame with 1/2" x 1/2" thin aluminum lattice. The standard finish is clear anodized finish.

MODEL EC DIMENSIONS

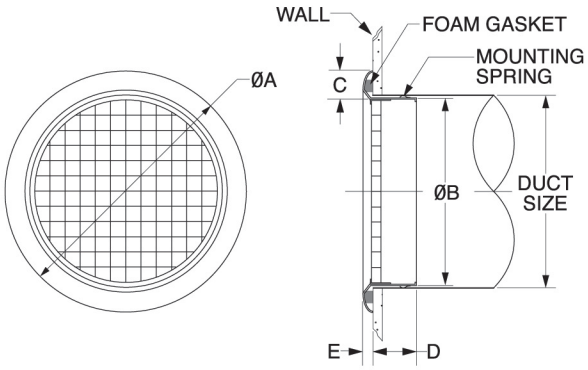

MATERIAL
- Aluminum

FINISH
- Clear Anodized
- Custom Colors Available

MODEL	DUCT SIZE	LATTICE	A	B	C	D	E	FREE AREA
EC 8	8	½ x ½	10 1/16	7 9/16	1 ¼	3	15/32	0.22sq.ft.
EC 10	10	½ x ½	12 1/32	9 17/32	1 ¼	3	15/32	0.37sq.ft.
EC 12	12	½ x ½	14	11 ½	1 ¼	3	19/32	0.56sq.ft.

Product information is subject to change without notice. All dimensions in inches.

Butterfly Damper

Model: **BS**

Model BS damper with multiple blades is designed for air volume control for round ducts. Continuously adjustable from the face with a screwdriver for quick and easy volume control just by twisting until the desired setting is reached. The multiple blades provide more precise control. All-steel construction for durability.

*Note: Not for use with flexible ducts.

MATERIAL
- Heavy Gauge Steel

FINISH
- Black

MODEL BS DIMENSIONS

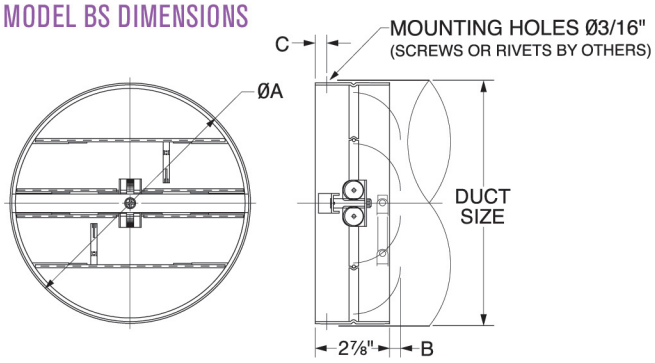

MODEL	DUCT SIZE	A	B	C
BS 6	6	5 11/16	22/32	22/32
BS 8	8	7 21/32	3/32	22/32
BS 10	10	9 ⅝	19/32	22/32
BS 12	12	11 ⅝	1 1/16	22/32
BS 14	14	13 ⅝	1 9/16	22/32
BS 16	16	15 9/16	2 1/32	22/32
BS 20	20	19 ½	3 1/32	22/32
BS 24	24	23 7/16	4 1/32	22/32

Product information is subject to change without notice. All dimensions in inches.


HOT DRINKS
SHORT MEDIUM LARGE
CAFFÉ LATTE カフェラテ ¥280 ¥330 ¥380
CAPPUCCINO カプチーノ ¥280 ¥330 ¥380
CAFFÉ MOCHA カフェモカ ¥320 ¥370 ¥420
AURORE CARAMEL LATTE アーモンドキャラメルラテ ¥320 ¥370 ¥420
MAPLE LATTE メープルラテ ¥320 ¥370 ¥420
ESPRESSO エスプレッソ ¥250 ¥300
COFFEE OF THE DAY 本日のコーヒー ¥250 ¥300 ¥330
TEA ティー ¥250
ROYAL MILK TEA ロイヤルミルクティー ¥280 ¥330 ¥380
ICED DRINKS
SHORT MEDIUM LARGE
ICED CAFFE LATTE アイスカフェラテ ¥280 ¥330 ¥380
ICED CAFFÉ MOCHA アイスカフェモカ ¥320 ¥370 ¥420
ICED AURORE CARAMEL LATTE アイスアーモンドキャラメルラテ ¥320 ¥370 ¥420
ICED MAPLE LATTE アイスメープルラテ ¥320 ¥370 ¥420
PEARL ICED LATTE パールアイスラテ ¥340 ¥390 ¥440
FROZEN MOCHA LATTE フローズンモカラテ ¥320 ¥370 ¥420
ICED COFFEE アイスコーヒー ¥250 ¥300 ¥330
ICED TEA アイスティー ¥250 ¥300 ¥350
ICED ROYAL MILK TEA アイスロイヤルミルクティー ¥280 ¥330 ¥380
FOODS
PANINI パニーニ
SEAFOOD GRATIN シーフードグラタン ¥340
CROQUE MONSIEUR クロックムッシュ ¥380
SMOKED HAM & CHEESE, MUSHROOM きのことスモークハムとチーズ ¥380
CARDIGANT CHEESE & BEEF PASTRAMI カマンベールとパストラミビーフ ¥380
ITALIAN HOT DOGS イタリアンドッグ
PLAIN DOG プレーンドッグ ¥230
CHEESE DOG チーズドッグ ¥270

MATERIAL	FINISH
• ABS Resin	• White

New!

Model: JSP

The versatile JSP Adjustable Plastic Grille features a square plate that can be pressed in for adjusting the airflow at four different positions: three levels in the open position and the closed position. The JSP offers excellent architectural styling for low flow supply and exhaust applications. Designed for ceiling and wall mounting, it provides an integral, readily-accessible airflow adjustment in its installed position. The high density plastic construction is virtually corrosion-proof and is ideal for use in high humidity indoor installations, such as bathrooms, showers, and dish washing areas.

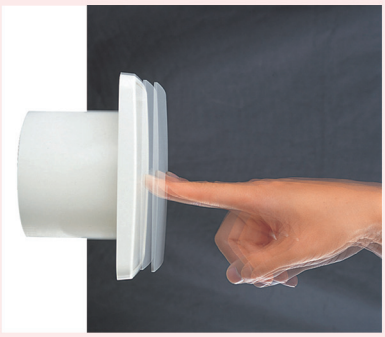

FEATURES

- Adjustable Volume Control by Pressing Face Plate
- Contemporary Design Goes with All Decors
- Low Silhouette, Unobtrusive Profile
- Concealed, Spring Clip, Fastening Mechanism
- Available for Standard Duct Sizes
- Wall or Ceiling Mountable

APPLICATIONS

- Fresh Air Intake
- Ventilation for Interior and Exterior Locations
- Residential, Commercial, and Marine Applications
- For Use With Ducted and Unducted Systems
- Bathroom Exhaust & Supply Applications

- Removable core for easy installation and maintenance

MODEL JSP DIMENSIONS

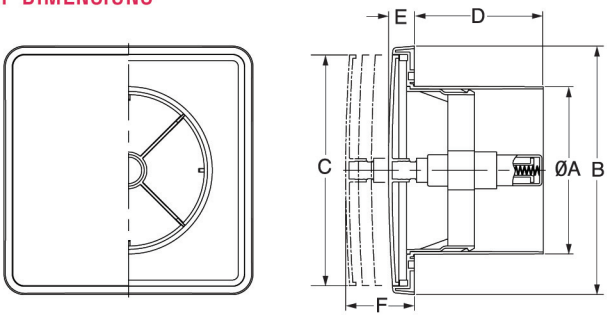

MODEL	DUCT SIZE	A	B	C	D	E	F
JSP 4	4	3 3/4	5 23/32	5 9/32	2 3/4	19/32	1 1/2 : 1 1/4 : 31/32
JSP 6	6	5 13/16	7 11/16	7 3/16	2 3/4	21/32	1 3/4 : 1 1/4 : 1

Product information is subject to change without notice. All dimensions in inches.

Volume Adjustable Grilles

Model: **JRC/JRA/DK-M3/DK-M**

SEIHO
www.seiho.com

Seiho's Volume Adjustable Grilles offers excellent architectural styling for low flow supply and exhaust applications. Designed for ceiling and wall mounting, they provides a readily-accessible air flow adjustment. The high density plastic (JRA, DK-M, DK-M3) and anodized aluminum (JRC) construction are virtually corrosion-proof and is ideal for use in high humidity indoor installations, such as bathrooms, showers, and dish washing areas.

FEATURES

- Contemporary Design Goes with All Decors
- Low Silhouette, Unobtrusive Profile
- Wall or Ceiling Mountable*
- Infinite Adjustable Core for Volume Control
- Positive Sealing Core-to-Body Mount
- 360° Diffusion Air Pattern
- Concealed, Spring Clip, Fastening Mechanism
- Available for Standard Duct Sizes in 4" and 6" Round

*Note: Recommended use of (3) No.8 screws through body into duct wall to ensure positive connection in ceiling application

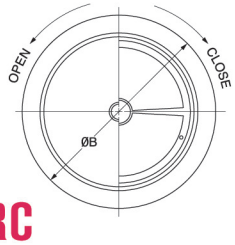

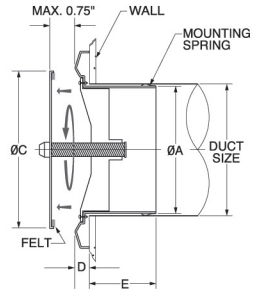

Model: **JRC**

MATERIAL	FINISH
• Aluminum	• Clear Anodized • Custom Colors Available

MODEL	DUCT SIZE	A	B	C	D	E
JRC 4	4	3 3/4	6 5/16	5 1/8	19/32	2 3/16
JRC 6	6	5 11/16	8 3/4	7 5/16	19/32	2 3/8

Product information is subject to change without notice. All dimensions in inches.

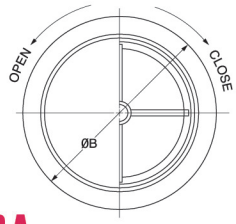

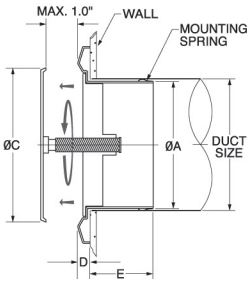

Model: **JRA**

MATERIAL	FINISH
• ABS Resin	• White

MODEL	DUCT SIZE	A	B	C	D	E
JRA 4	4	3 25/32	5 29/32	5 11/32	1/2	1 31/32
JRA 6	6	5 22/32	7 7/8	6 7/32	1/2	1 31/32

Product information is subject to change without notice. All dimensions in inches.

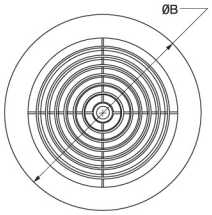

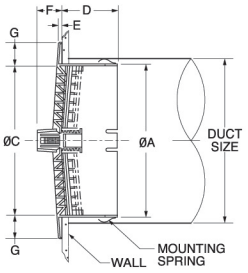

Model: **DK-M3**
(with Slide Damper)

MATERIAL	FINISH
• ABS Resin	• White

MODEL	DUCT SIZE	A	B	C	D	E	F	G	FREE AREA
DK 3M3	3	2 29/32	4 1/4	3 1/8	1 15/16	3/16	9/16	9/16	0.02sq.ft.
DK 4M3	4	3 7/8	5 1/8	4	1 15/16	3/16	1/2	9/16	0.04sq.ft.
DK 6M3	6	5 7/8	7 1/16	5 15/16	1 15/16	3/16	9/16	9/16	0.08sq.ft.

Product information is subject to change without notice. All dimensions in inches.

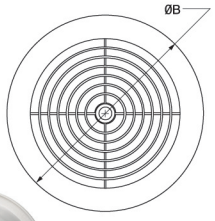

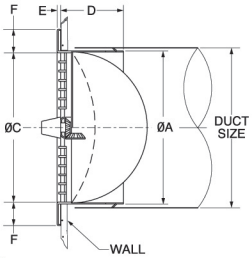

Model: **DK-M**
(with Butterfly Damper)

MATERIAL	FINISH
• ABS Resin	• White

MODEL	DUCT SIZE	A	B	C	D	E	F	FREE AREA
DK 3M	3	2 29/32	3 29/32	2 23/32	1 9/16	3/16	5/8	0.02sq.ft.
DK 4M	4	3 29/32	5 3/32	3 21/32	2 1/8	3/16	23/32	0.04sq.ft.
DK 6M	6	5 13/16	7 1/16	5 11/32	2 1/8	3/16	27/32	0.10sq.ft.

Product information is subject to change without notice. All dimensions in inches.

Model: **SFX-S**
(Model SFX-SN: With Screen)

Model: **SX-S**
(Model SX-SN: With Screen)

New!

Seiho's popular Vent Caps are now available in 304 stainless steel. The SX-S & hooded SFX-S series of vent caps are perfect for any venting applications such as storage rooms, attics, basements, and bathroom and kitchen exhausts. Insect screens are an option.

MATERIAL	FINISH
• Stainless Steel	• Polished • Custom Colors Available

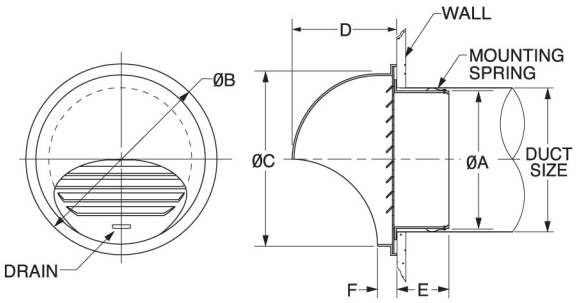

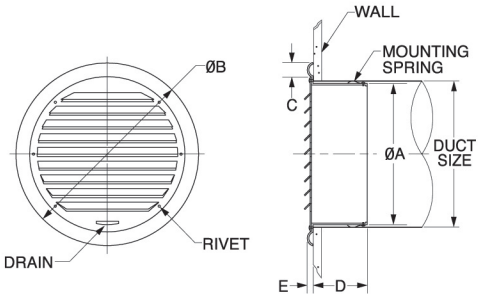

MODEL	DUCT SIZE	A	B	C	D	E	F	FREE AREA
SFX 4S	4	3 13/16	6 3/32	5 1/8	3 17/32	1 9/16	3/4	0.04 sq.ft.
SFX 6S	6	5 23/32	8 1/16	7 1/16	4 17/32	2 9/16	3/4	0.08 sq.ft.

Product information is subject to change without notice. All dimensions in inches.

MODEL	DUCT SIZE	A	B	C	D	E	FREE AREA
SX 4S	4	3 13/16	5 23/32	19/32	1 21/32	9/32	0.04 sq.ft.
SX 6S	6	5 23/32	8	25/32	2 3/4	9/32	0.08 sq.ft.

Product information is subject to change without notice. All dimensions in inches.

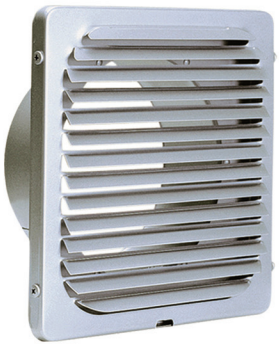

Model: **KX**
(Model KX-N: With Screen)

New!

The new KX vent cap is ideal for residential ventilation applications such as storage rooms, attics, basements, as well as bathroom / kitchen exhaust. The clean square design is a perfect match for contemporary and classic building alike. Insect screens can be added as an option.

MATERIAL	FINISH
• Aluminum	• Clear Anodized • Custom Colors Available

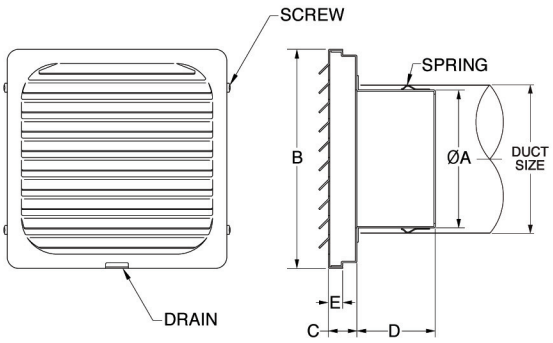

MODEL	DUCT SIZE	A	B	C	D	F	FREE AREA
KX 3	3	2 3/4	6 3/32	25/32	1 3/4	7/16	0.12 sq.ft.
KX 4	4	3 3/4	6 3/32	25/32	1 3/4	7/16	0.12 sq.ft.
KX 5	5	4 1/2	8	25/32	1 3/4	7/16	0.21 sq.ft.
KX 6	6	5 23/32	8	25/32	2 1/4	7/16	0.21 sq.ft.

Product information is subject change without notice. All dimensions in inches.

The SX series of vent caps are perfect for any venting applications such as storage rooms, attics, basements, and bathroom and kitchen exhausts. Beautiful anodized aluminum finish fits many decorating schemes. Insect screens are an option.

Model: SX

(Model SX-N: With Screen)

MATERIAL	FINISH
• Aluminum	• Clear Anodized • Custom Colors Available

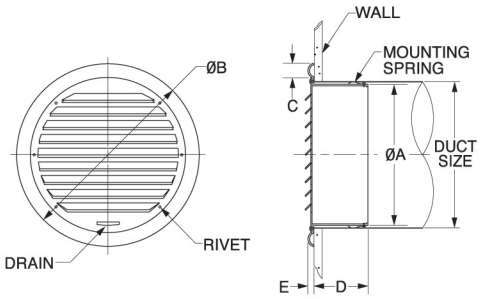

MODEL	DUCT SIZE	A	B	C	D	E	FREE AREA
SX 3	3	2 29/32	4 13/16	19/32	1 3/8	9/32	0.02 sq.ft.
SX 4	4	3 13/16	5 23/32	19/32	1 21/32	9/32	0.04 sq.ft.
SX 5	5	4 3/4	6 21/32	19/32	1 25/32	9/32	0.05 sq.ft.
SX 6	6	5 23/32	8	25/32	2 3/4	9/32	0.08 sq.ft.
SX 7	7	6 11/16	8 31/32	25/32	2 3/4	9/32	0.11 sq.ft.
SX 8	8	7 11/16	10	25/32	2 31/32	9/32	0.14 sq.ft.

Product information is subject to change without notice. All dimensions in inches.

The SFX vent cap is identical to the SX with an exception of the hood. This model is excellent for exteriors where protection from the elements is necessary and not already carried out by the building design. Insect screens are an option.

Model: SFX

(Model SFX-N: With Screen)

MATERIAL	FINISH
• Aluminum	• Clear Anodized • Custom Colors Available

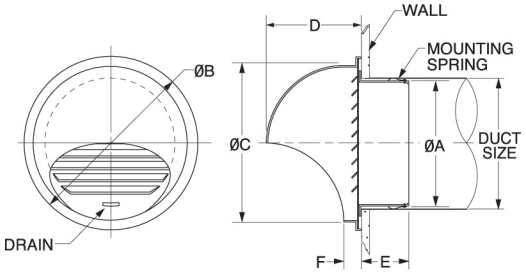

MODEL	DUCT SIZE	A	B	C	D	E	F	FREE AREA
SFX 3	3	2 29/32	4 3/4	3 25/32	2 11/16	1 9/16	9/16	0.02 sq.ft.
SFX 4	4	3 13/32	6 3/32	5 1/8	3 17/32	1 9/16	3/4	0.04 sq.ft.
SFX 5	5	4 3/4	6 29/32	5 29/32	3 15/16	1 31/32	3/4	0.05 sq.ft.
SFX 6	6	5 23/32	8 1/16	7 1/16	4 17/32	2 9/16	3/4	0.08 sq.ft.
SFX 7	7	6 11/16	9 15/32	8 9/32	5 1/8	2 9/16	3/4	0.11 sq.ft.
SFX 8	8	7 11/16	10 5/8	9 7/16	5 23/32	2 31/16	3/4	0.14 sq.ft.
SFX10	10	9 21/32	13	11 13/16	6 29/32	3 11/32	3/4	0.24 sq.ft.
SFX12	12	11 19/32	14 1/4	13	7 15/32	2 3/4	3/4	0.31 sq.ft.

Product information is subject to change without notice. All dimensions in inches.

The SXL vent cap is a large version of the SX. Its main application is as a return air grille, though it can serve in the same purpose as the SX. Its flush face lends a clean look, and its aluminum construction and spring clip mounting makes it easy to install with no screws to mar the surface. Insect screens are an option.

Model: SXL

(Model SXL-N: With Screen)

MATERIAL	FINISH
• Aluminum	• Clear Anodized • Custom Colors Available

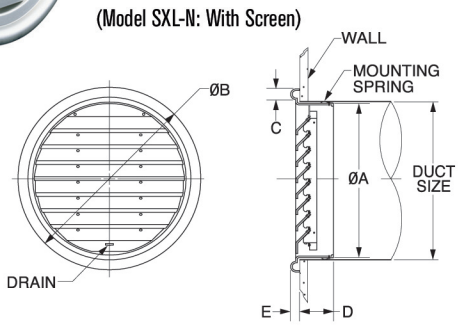

MODEL	DUCT SIZE	A	B	C	D	E	FREE AREA
SXL10	10	9 21/32	12 11/16	1	2 31/32	13/32	0.19 sq.ft.
SXL12	12	11 19/32	14 21/32	1	2 31/32	13/32	0.27 sq.ft.
SXL14	14	13 19/32	16 5/8	1	3 11/32	19/32	0.37 sq.ft.
SXL16	16	15 9/16	18 19/32	1	3 11/32	19/32	0.49 sq.ft.

Product information is subject to change without notice. All dimensions in inches.

Vent Caps

APPLICATIONS

Fresh Air Intake/Exhaust Outlet and Ventilation for Interior and Exterior Locations.

- Homes
- Condominiums
- Apartments
- Ships
- Warehouses
- Commercial Buildings
- Retail Buildings
- Restaurants
- Gymnasiums

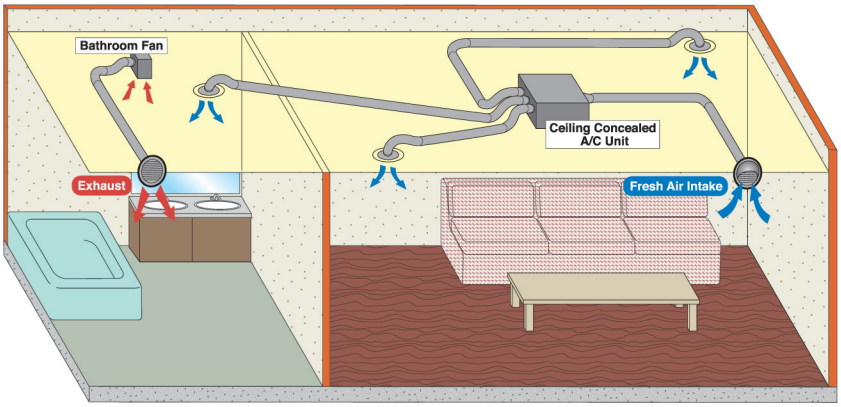

ALUMINUM VENT CAP SELECTION

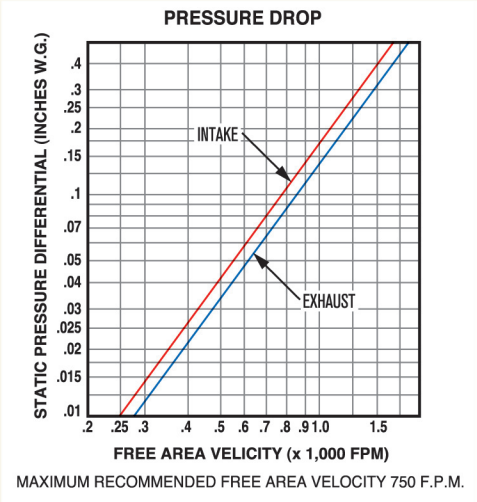

1. To determine minimum free area required for vent, divide the required CFM flow by the maximum recommended free area velocity of 750 FPM. Given 125 CFM: Min. free area = 125 CFM/750 FPM = 0.16 sq. ft.

2. From the Dimension table, find the corresponding minimum vent size. Model SXL 10 has 0.19 sq. ft. free area.

3. Verify the static pressure drop through the vent from the Pressure Drop Chart. Velocity of 750 FPM has 0.09 in. w.g. static pressure drop.

ALUMINUM VENT CAP SELECTION

SEIHO Vent Caps are designed and manufactured with the architect in mind for every venting need required such as under roof vents where no duct attachments are required, or for specialty vents, as outlets, attached to internal ducts from fan systems.

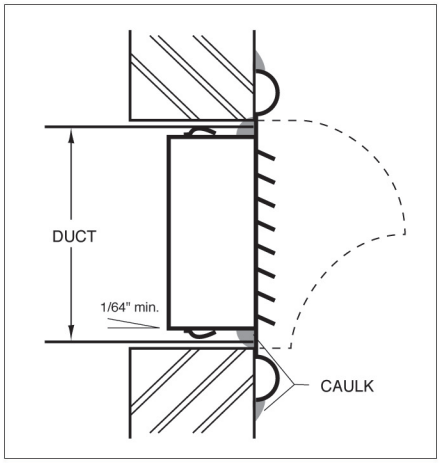

SEIHO Vent Caps are designed for ease of installation on any exterior surface after all other mechanical and architectural work has been completed. There is no interference with other hidden or exposed items during the construction process, and therefore no cause for delays. Because of the lightweight aluminum construction SEIHO Aluminum Vent Caps are easily installed using only a high grade silicon Caulk. No special tools or techniques required. No adjustments are required.

Note: No louver manufacturer warrants their louver to prevent water penetration under all possible circumstances of wind and rain.

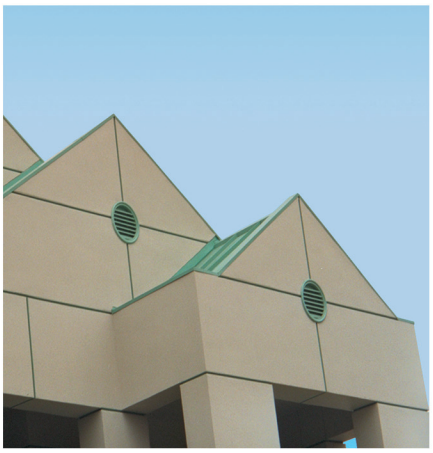

AVAILABLE IN CUSTOM COLORS

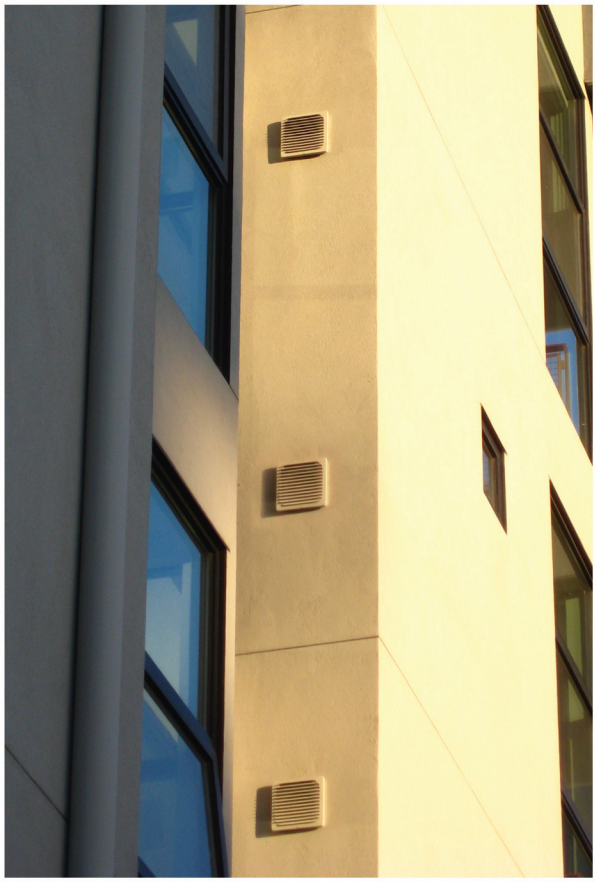

Model: SB-P & SFB-P

MATERIAL
- Aluminum

FINISH
- Clear Anodized
- Custom Colors Available

New!

Model: **SB-P**

Model: **SFB-P**

Our dryer vents SB and SFB are now available with a rigid, heavy-duty 8.6" long aluminum pipe attached to it. The round pipe is ideal for throught-the-wall mounting, and is available in two sizes, Ø4" and 6". The SB-P and SFB-P Dryer Vents come standard with a flapper damper, preventing outside air from back-drafting into the house through the dryer. The heavy-gauge anodized aluminum construction is corrosion-resistant for durability.

Note: No louver manufacturer warrants their louver to prevent water penetration under all possible circumstances of wind and rain.

FEATURES

- With Back-Draft Flapper Damper
- With Heavy Duty 8.6" Long Aluminum Pipe
- 4" or 6" Round Duct Connection
- Large Free Area Reduces Clogging
- Aluminum Construction
- Anodized Finish for Corrosion Protection
- Ø3/16" Mounting Holes (SB-PH & SFB-PH)

MODEL SB-P/SB-PH DIMENSIONS

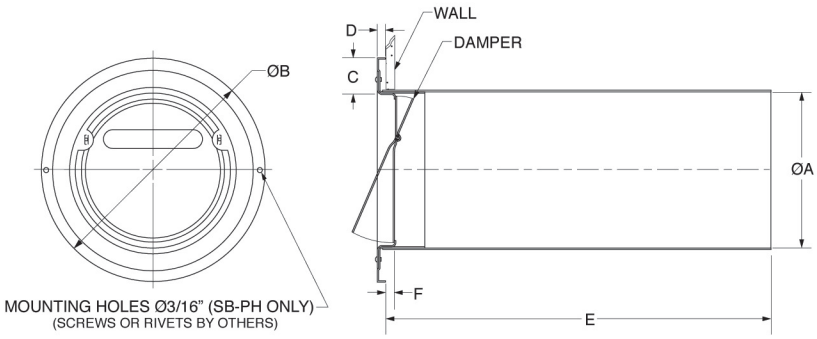

MODEL	A	B	C	D	E	F	FREE AREA
SB 4P/SB 4PH	4	5 3/4	1 7/8	9/32	8 1/2	7/32	0.059 sq.ft.
SB 6P/SB 6PH	6	7 3/4	1 7/8	9/32	8 1/2	1/2	0.140 sq.ft.

Product information is subject to change without notice. All dimensions in inches.

MODEL SFB-P/SFB-PH DIMENSIONS

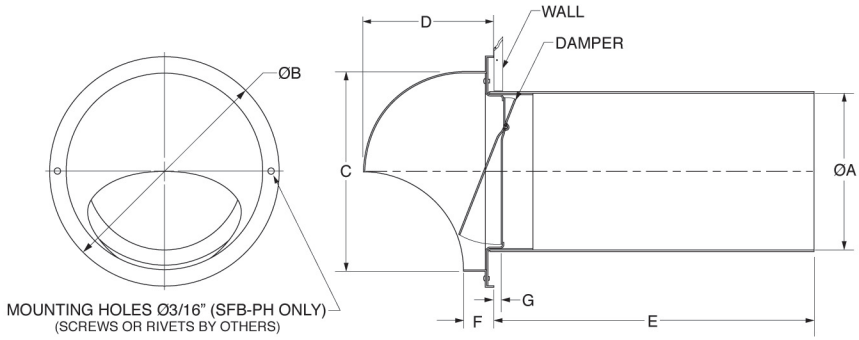

MODEL	A	B	C	D	E	F	G	FREE AREA
SFB 4P/SFB 4PH	4	6 3/32	5 1/8	3 17/32	8 1/2	1	9/32	0.056 sq.ft.
SFB 6P/SFB 6PH	6	8 3/32	7 3/32	4 17/32	8 1/2	1	9/16	0.140 sq.ft.

Product information is subject to change without notice. All dimensions in inches.

Model: **SB**

Model: **SFB**

MATERIAL	FINISH
• Aluminum	• Clear Anodized • Custom Colors Available

Exceptionally designed for exterior applications, the SFB and the SB are easy to install and have large openings to reduce clogging. Standard with flapper damper, it prevents outside air from back-drafting into the house through the dryer. Both models are suited to exhaust fan applications such as dryer, bathroom, or kitchen exhaust venting. The heavy-gauge anodized aluminum construction is corrosion-resistant for durability. Removable from ductwork for easy cleaning for dryer vent use.

Note: No louver manufacturer warrants their louver to prevent water penetration under all possible circumstances of wind and rain.

FEATURES

- With Back-Draft Flapper Damper
- Large Free Area Reduces Clogging
- Aluminum Construction
- Anodized Finish for Corrosion Protection
- Economical
- Available for Standard Duct Sizes in 4" and 6" Round

MODEL SB DIMENSIONS

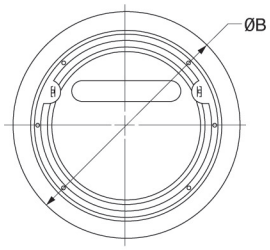

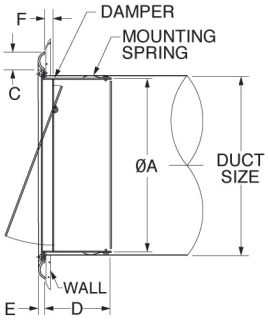

MODEL	DUCT SIZE	A	B	C	D	E	F	FREE AREA
SB 4	4	3 13/16	5 23/32	19/32	1 21/32	5/16	5/16	0.059 sq.ft.
SB 6	6	5 23/32	8	25/32	2 3/4	3/8	5/8	0.140 sq.ft.

Product information is subject to change without notice. All dimensions in inches.

MODEL SFB DIMENSIONS

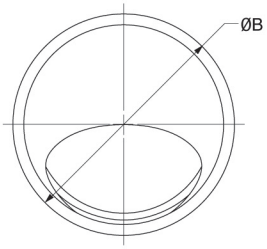

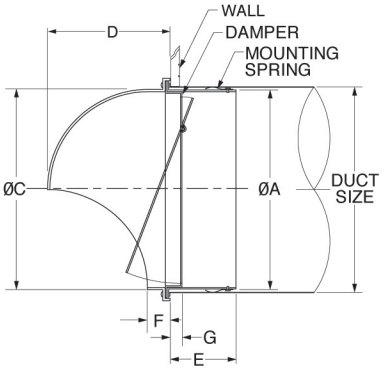

MODEL	DUCT SIZE	A	B	C	D	E	F	G	FREE AREA
SFB 4	4	3 13/16	4 3/4	3 25/32	2 11/16	1 9/16	13/16	5/16	0.054 sq.ft.
SFB 6	6	5 23/32	6 29/32	5 29/32	3 15/16	2 9/16	27/32	11/32	0.130 sq.ft.

Product information is subject to change without notice. All dimensions in inches.

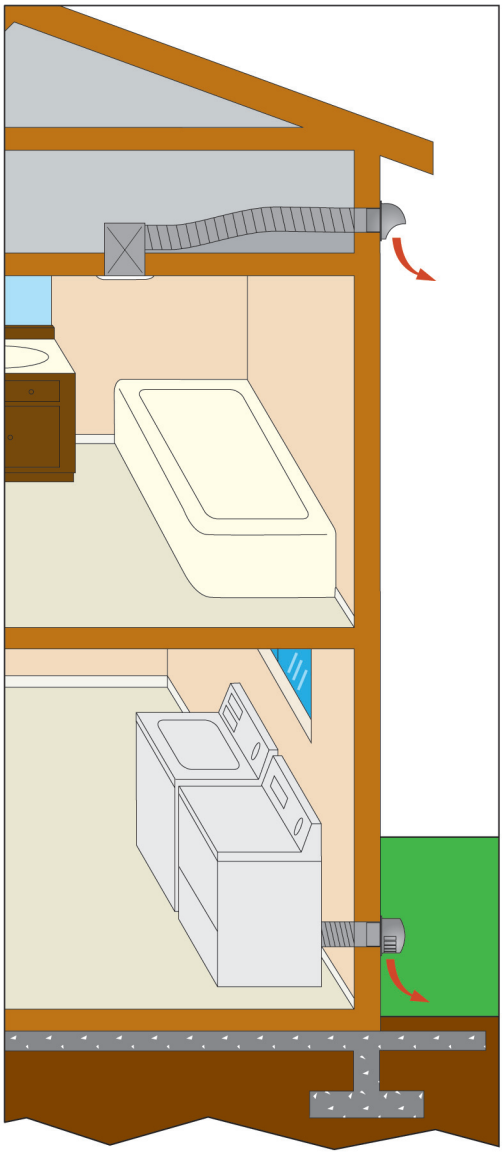

Model: **SFZ**

Model: **SFZC**
(with Backdraft Damper)

MATERIAL
- Aluminum

FINISH
- Clear Anodized
- Custom Colors Available

Exceptionally designed for exterior applications, the SFZ and the SFZC are easy to install and have large openings to reduce clogging. SFZ is suited to exhaust fan applications such as dryer, bathroom, or kitchen exhaust venting. The heavy-gauge anodized aluminum construction is corrosion-resistant for durability.

Note: No louver manufacturer warrants their louver to prevent water penetration under all possible circumstances of wind and rain.

FEATURES

- With Back-Draft Damper (SFZC)
- Anodized Finish for Corrosion Protection
- Made from Machined Anodized Aluminum
- Available for Standard Duct Sizes in 4" and 6" Round
- Large Free Area Reduces Clogging
- Economical
- Water Condensation Drain
- Designed for Weather Resistance

MODEL SFZ DIMENSIONS

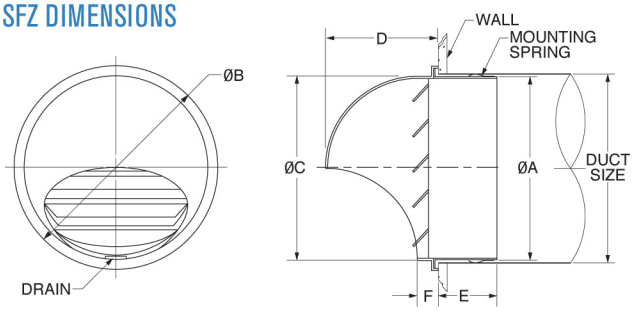

MODEL	DUCT SIZE	A	B	C	D	E	F	FREE AREA
SFZ 4	4	3 13/16	4 3/4	3 25/32	2 11/16	1 9/16	9/16	0.04 sq.ft.
SFZ 6	6	5 23/32	6 29/32	5 29/32	3 15/16	2 9/16	3/4	0.11 sq.ft.

Product information is subject to change without notice. All dimensions in inches.

MODEL SFZC DIMENSIONS

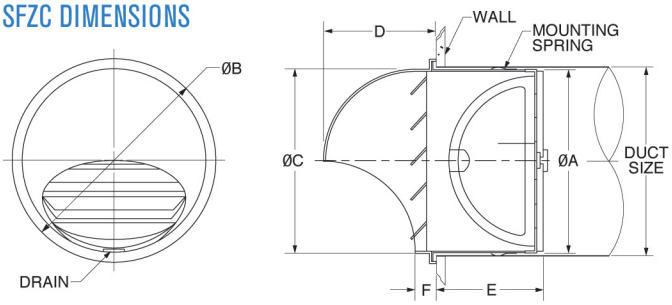

MODEL	DUCT SIZE	A	B	C	D	E	F	FREE AREA
SFZC 4	4	3 13/16	4 3/4	3 25/32	2 11/16	2 5/32	9/16	0.04 sq.ft.
SFZC 6	6	5 23/32	6 29/32	5 29/32	3 15/16	3 3/4	3/4	0.11 sq.ft.

Product information is subject to change without notice. All dimensions in inches.

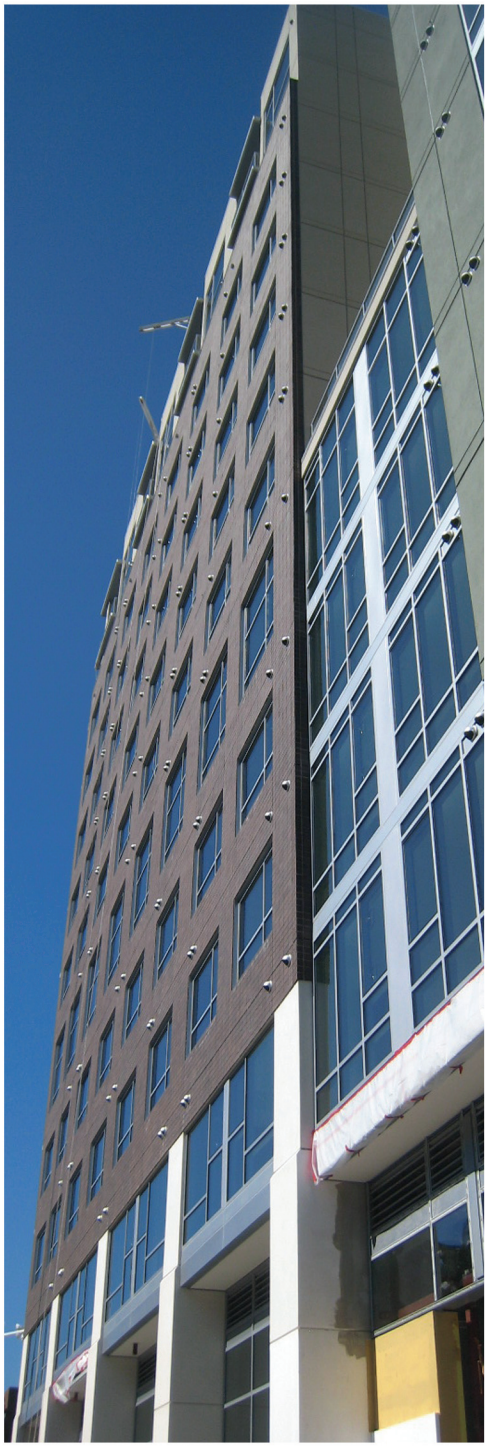

MATERIAL
- Stainless Steel (304)

FINISH
- Polished
- Custom Colors Available

Model: **RCA-S**

Model: **RCC-S**
(with Backdraft Damper)

The RCA-S and the damper-equipped RCC-S Dryer Vents are made from polished 304 stainless steel making them durable and weather resistant. Designed for exterior applications, both models are easy to install and have large openings to reduce clogging. RCA-S is suited to exhaust fan applications such as dryer, bathroom, or kitchen exhaust venting. The heavy-gauge stainless steel construction is corrosion-resistant for durability.

Note: No louver manufacturer warrants their louver to prevent water penetration under all possible circumstances of wind and rain.

FEATURES

- With Back-Draft Damper (RCC-S)
- Large Free Area Reduces Clogging
- Available for Standard Duct Sizes in 4" and 6" Round
- Made from 304 Stainless Steel
- Designed for Weather Resistance
- Available with Bug Screen (RCA-S only-Model RCA-SN)

MODEL RCA-S DIMENSIONS

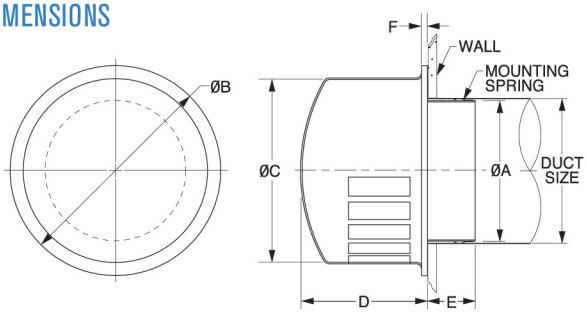

MODEL	DUCT SIZE	A	B	C	D	E	F	FREE AREA
RCA 4S	4	3 25/32	6 1/2	5 1/2	3 3/4	1 9/16	1/4	0.08 sq.ft.
RCA 6S	6	5 23/32	8 17/32	7 15/32	5 1/8	1 31/32	1/4	0.18 sq.ft.

Product information is subject to change without notice. All dimensions in inches.

MODEL RCC-S DIMENSIONS

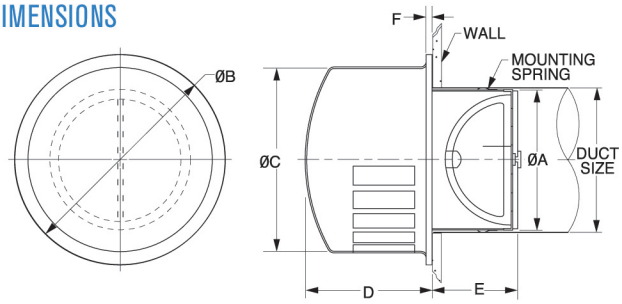

MODEL	DUCT SIZE	A	B	C	D	E	F	FREE AREA
RCC 4S	4	3 25/32	6 1/2	5 1/2	3 3/4	2 5/32	1/4	0.07 sq.ft.
RCC 6S	6	5 23/32	8 17/32	7 15/32	5 1/8	3 3/4	1/4	0.16 sq.ft.

Product information is subject to change without notice. All dimensions in inches.

Demonstration of airflow patterns seen in various models

SpotDiffuser Model:PK (Size 6”)

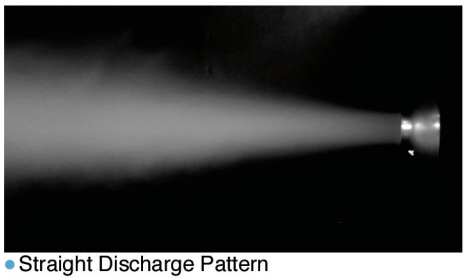

- Straight Discharge Pattern

- 40 Degree Discharge Pattern

- 40 Degree Discharge Pattern

TurboNozzle Model:NT (Size 10”)

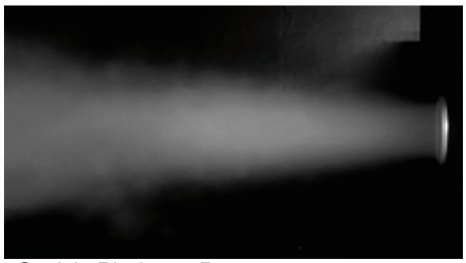

- Straight Discharge Pattern

- 22.5 Degree Discharge Pattern

- 22.5 Degree Discharge Pattern

SpotDiffuser with Condensation Control Air Guide Model:PK-K (Size10”)

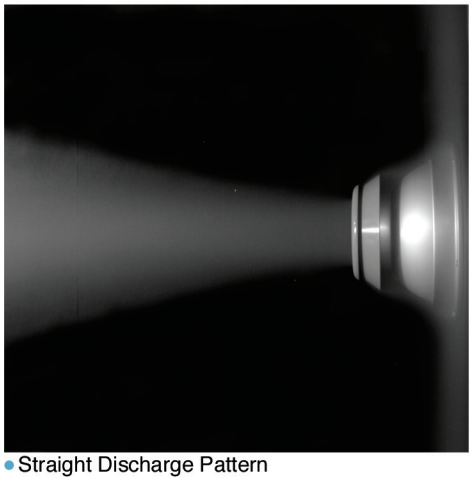

- Straight Discharge Pattern

TurboNozzle Model:NP (Size 10”)

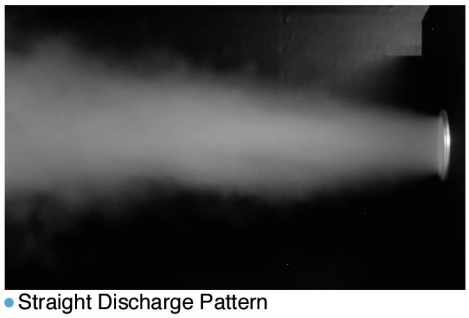

- Straight Discharge Pattern

Round Grille Model:RHV (Size 10")

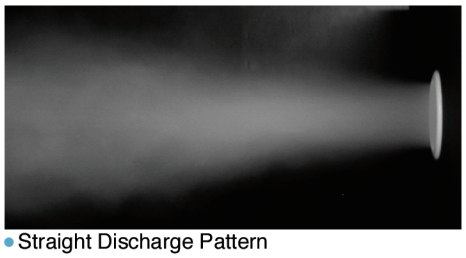

- Straight Discharge Pattern

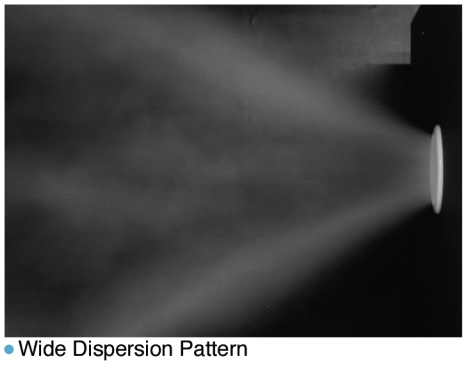

- Wide Dispersion Pattern

- 45 Degree Discharge Pattern

Round Grille Model:NR-B (Size 10")

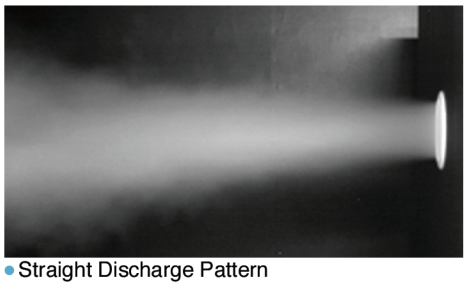

- Straight Discharge Pattern

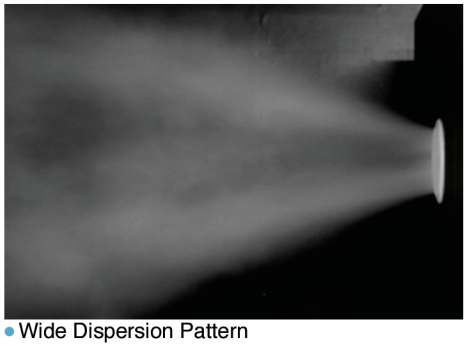

- Wide Dispersion Pattern

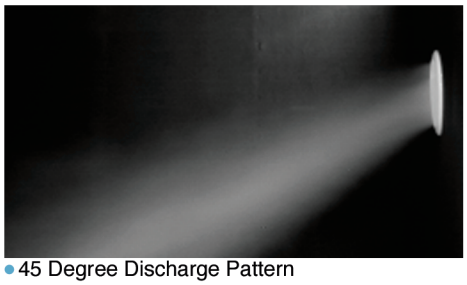

- 45 Degree Discharge Pattern

Vent Cap Model:SX (Size 6")

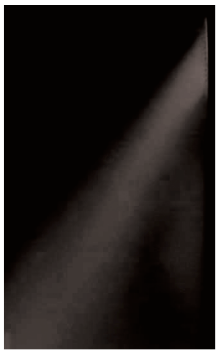

Vent Cap Model:SFX (Size 6")

- SEIHO International, Inc., reserves the right to make design, specification and dimension changes at any time.
- SEIHO International, Inc., confirms that we have obtained performance test data for all our louvers from a certified, independent laboratory. The responsibility for matching the proper model and size of the louver to the particular application required rests solely with the user.
- SEIHO International, Inc., cannot be held liable in any manner for the selection of the louvers by the user.

PRINTED IN U.S.A.

Seiho International,Inc.

P.O.Box 91813 Pasadena, CA 91109 U.S.A.

Tel:(800)248-0030 (626)395-7299 Fax:(626)395-7290

www.seiho.com e-mail:info@seiho.com