2026 Benner-Nawman

Low-Voltage Enclosures
Specialty Tools
Generators
Work Lights
Introducing Trunktie®

TABLE OF CONTENTS

ELECTRICAL WHOLESALE CATALOG

Benner-Nawman

QUALITY PRODUCTS SINCE 1925

Table of Contents	2
Interior Media Enclosures - Plastic	3
Interior Media Enclosures - Steel	5
Exterior Semi-Recessed - Small Enclosures	7
Exterior Semi-Recessed - Steel/Plywood Enclosures	9
Exterior Surface-Mounted - Steel/Plywood Enclosures	11-13; 16-17
Welcome! A message from the leadership team at Benner-Nawman	14
Benner-Nawman Sales Information	15
Electrician Tools - Specialty Hand Tools for the Electrical Contactor	17
Trunktie® by Benner-Nawman	20
The Cutting Edge Saw™	22
Cutting Edge™ Accessories and Replacement Blades	23
Gasoline Generators: Inverter and Conventional	24
LED Work Lighting	27
About Benner-Nawman, Inc.	28

Ordering Information

- Distributors & Dealers may process orders by contacting Benner-Nawman Customer Support at (800) 992-3833 or emailing mail@bnproducts.com
  - Don't have an account set up yet? Apply online at **benner-nawman.com/become-a-distributor/**
  - Consumers can find a distributor online or near you at **benner-nawman.com/distributors/**
- For Distributor or Dealer price lists contact Benner-Nawman Customer Support at (800) 992-3833 or emailing mail@bnproducts.com

Scan QR Codes on product pages for additional detail for our tools or product lines found on each page

See Pages 4-5 for Details on our Wi-Fi-transparent, plastic, low-voltage enclosures.

Our boxes are designed for interior wiring and media connections for home internet, entertainment, and the needs of the modern Smart Home.

14304F-MMH **14″ Width x 28″ Height x 4″ Depth**

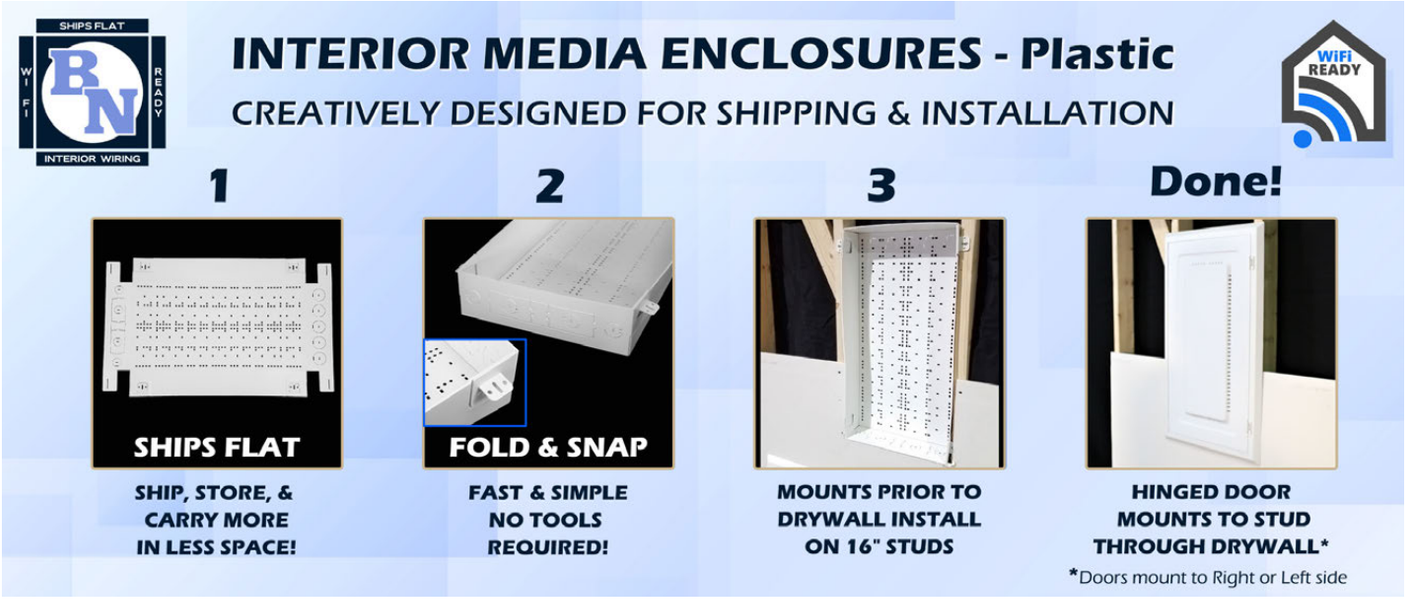

Features:

- WiFi-Friendly Structured Wiring Cabinet w/ Universal mounting pattern - fits most modules & brands
- Durable polypropylene construction does not block your WiFi signal
- Enclosure mounts prior to drywall between 16″ center studs (mounting tabs on side)

- Features folding sides with locking tabs that allow for assembly & installation in minutes
- Ventilated hinged door comes standard, mounts to stud with drywall in between
- Box weight: 6.8 lbs. (Ships flat!)
- Includes (5) 2″ KO on top & (2) 1.25″ KO and (2) AC KO on bottom

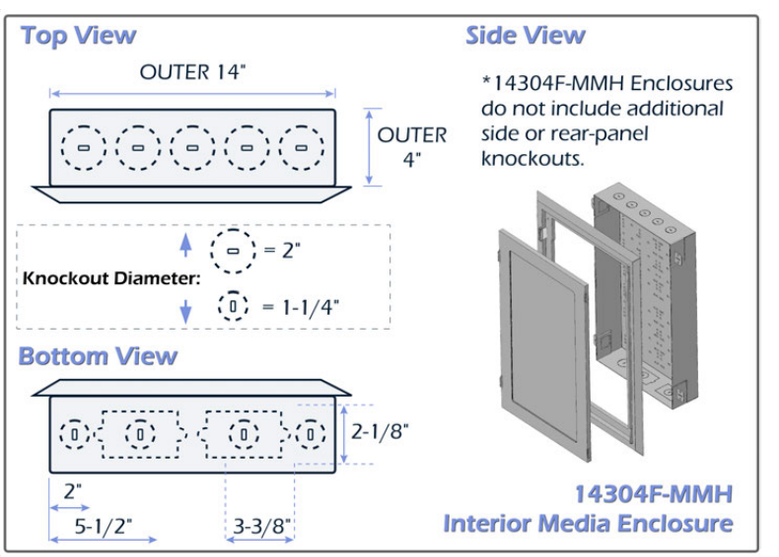

14304F-MMH
Installation

14164F-MMH **Available Now** 14″ Width x 16″ Height x 4″ Depth

The 14164F-MMH is a smaller-sized folding enclosure for applications where a larger box isn't needed - take advantage of the efficiency of storing multiple boxes for installation in a small space, as the box ships flat with simple fold & snap assembly!

Features:

- 14" W x 16" H x 4" D: WiFi-friendly structured wiring cabinet with universal mount pattern
- Durable polypropylene construction does not block WiFi signal
- Enclosure body mounts under drywall between 16" center studs
- Folding sides with locking tabs that allow unit to ship flat - but assemble in seconds (no tools!)
- Vented, locking hinged door included; mounts to studs with drywall in between
- Sold individually, or in volume packs
- Lightweight
- Knockouts: Top and bottom; AC knockout on bottom with five 2" knockouts on top; two rear panel knockouts
- Top and bottom exterior cable knockouts on door frame for direct cabling with door closed

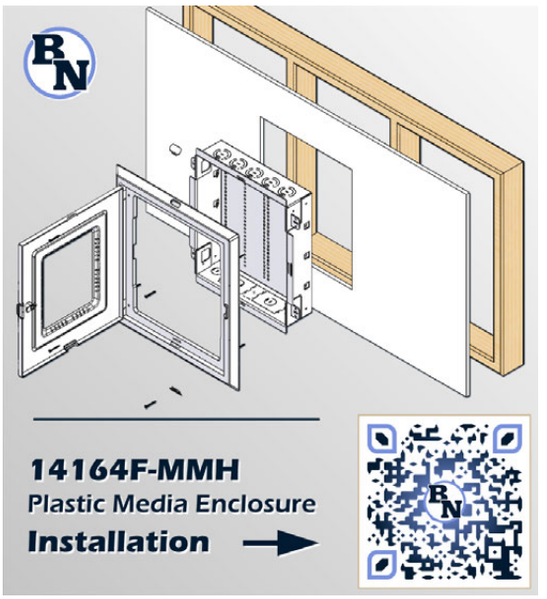

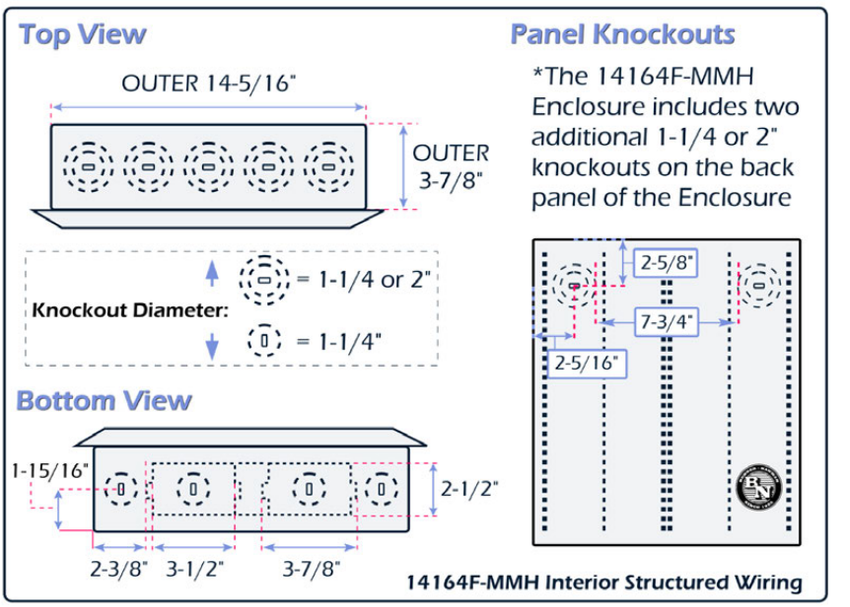

MM Series (Fastened Lid) — 14-1/4″ Width X 4″ Depth

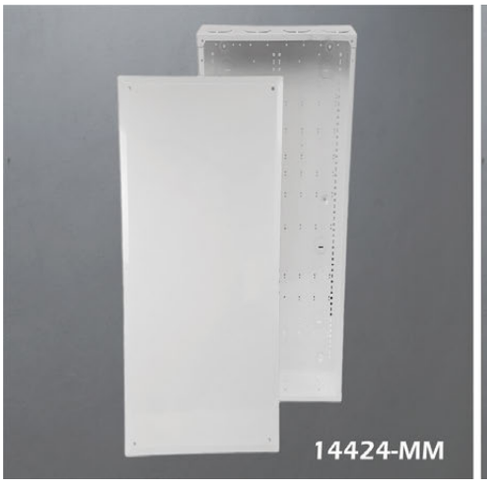

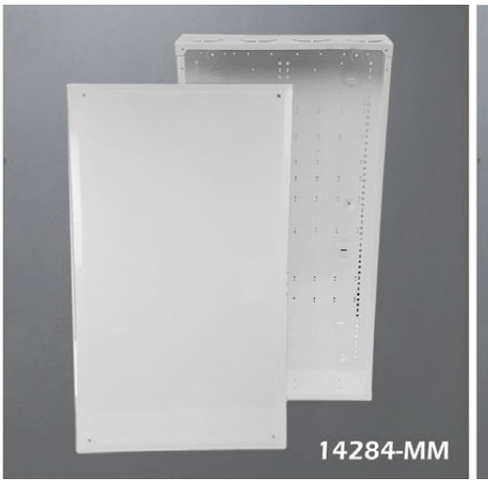

Features:

- Lid is attached by four (4) screws (Hinged door option available - See MMH Series)
- Universal mounting pattern - accepts most module brands
- Mounts prior to drywall between 16″ center studs
- Side-mounting slots and depth markings
- Body and screw-attached Lid may be purchased separately

Model #	Width (Inches)	Depth (Inches)	Height (Inches)	Box Weight (lbs)
14104-MM	14-1/4	4	10	8
14144-MM	14-1/4	4	14	10
14284-MM	14-1/4	4	28	17
14424-MM	14-1/4	4	42	25

All MM Series Models Include:

- Mounting Screws
- Grommets
- Instruction Sheet
- Cardboard overspray shield
- Zinc-coated steel construction
  - Powder-coat white finish
  - 20-gauge box with 18-gauge lid
- Knockouts
  - Top, and bottom (standard)
  - AC knockout on bottom
  - More options on sides and rear panel

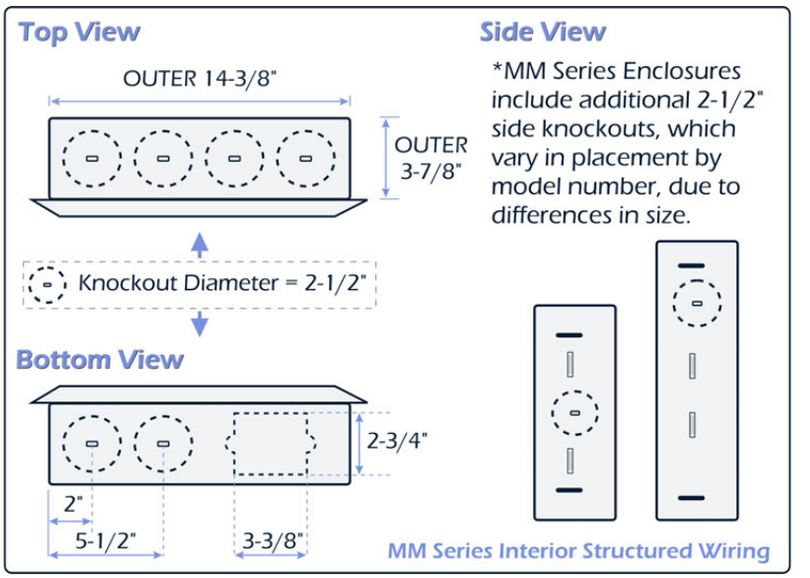

MMH Series (Hinged Door) — 14-1/4″ Width X 4″ Depth

Features:

- Hinged door included (see MM Series for lid option)
- UL-listed [UL 985 and UL 1023] (Most Models, excludes 14104-MMH))
- Universal mounting pattern - accepts most module brands
- Mounts prior to drywall between 16″ center studs
- Side-mounting slots and depth markings
- Body and hinged Door may be purchased separately

Model #	Width (Inches)	Depth (Inches)	Height (Inches)	Box Weight (lbs)	
14104-MMH	14-1/4	4	10	8	
14144-MMH	14-1/4	4	14	10	UL LISTED 985 1023
14284-MMH	14-1/4	4	28	17	
14424-MMH	14-1/4	4	42	25	

All MMH Series Models Include:

- Mounting Screws
- Grommets
- Instruction Sheet
- Cardboard overspray shield
- Zinc-coated steel construction
  - Powder-coat white finish
  - 20-gauge box with 18-gauge door
- Knockouts
  - Top and bottom (standard)
  - AC knockout on bottom
  - More options on sides and rear panel
- Fitted Cam Lock (**MM-KLA**) available for MMH-series metal media enclosures (includes two keys)

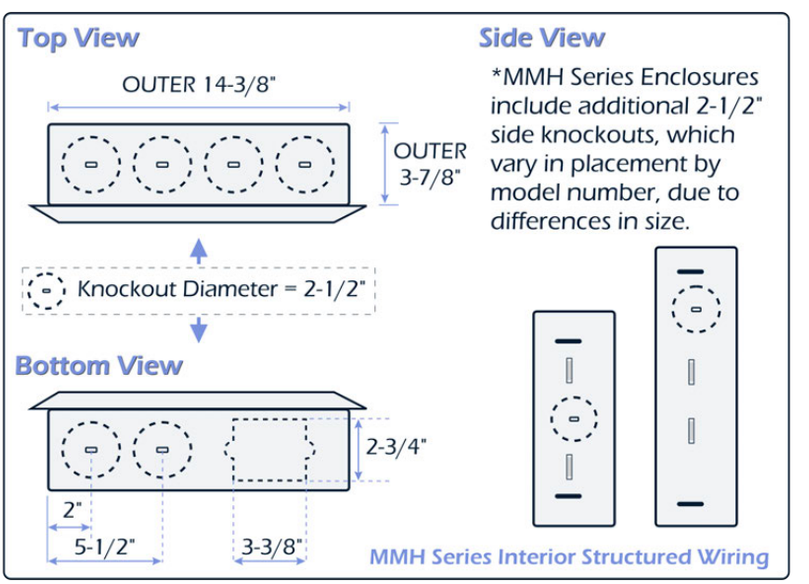

900 Series — 3-3/4″ Width X 7″ Height X 2″ Depth

Exterior Mounted Enclosure for Residences

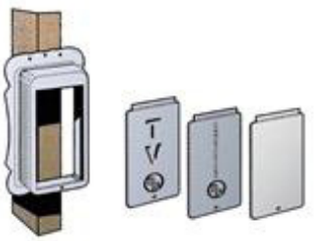

Features:

- Includes knockouts for 3/8″, 3/4″, and 1″ conduit
- Open back for easy wiring access
- Fastens directly to studs
- Constructed of 24 gauge galvanized steel
- Lid secured using set screw
- Lightweight: 8.96 oz
- May be purchased as complete enclosure; lids may be purchased separately

900 Series Enclosures Include:

- Enclosure / 50 units per carton
- Choice of galvanized steel lid w/ set screw
  - "Communication" embossed
  - "TV" embossed
  - Blank lid
  - GROUND decals available

900 SERIES ENCLOSURE

900B-X (LID)

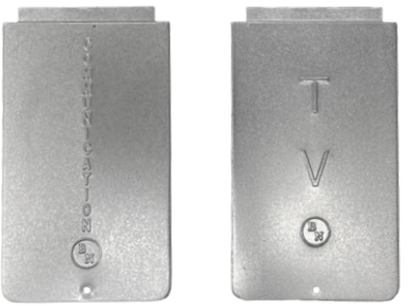

900B (LID)

900B-TV (LID)

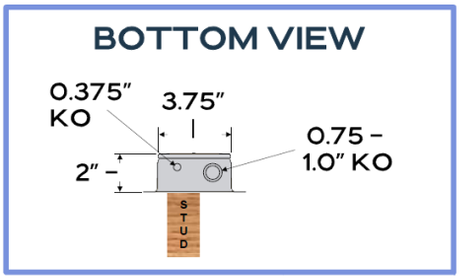

900 Series Model #	Description
900SK	7″ exterior semi-recessed enclosure; "Communications" embossed lid
900SK-TV	7″ exterior semi-recessed enclosure; "TV" embossed lid
900X	7″ exterior semi-recessed enclosure; blank lid
900G	7″ exterior semi-recessed enclosure; blank lid with "GROUND" decals included
(Lid Only) Model #	**Description**
900B	"Communications" embossed lid only
900B-TV	"TV" embossed lid only
900B-X	No markings embossed; blank lid only

1020 Series — 14-1/4″ Width X 4-1/2″ Height X 1-1/2″ Depth

Exterior Mounted Enclosure for Residences

Features:

- Open back with ready-access to splices or termination blocks for aerial drop or buried service
- Fastens directly to studs on 16″ center
- Lid secured via two slotted screws
- Constructed of 24 gauge galvanized steel
- Lightweight: 15.6 oz
- May be purchased as complete enclosure; may be purchased separately

1020 SERIES ENCLOSURE
(LID 1020B)

1020 Series Enclosures Include:

- Enclosure / 40 units per carton
- Choice of galvanized steel lid w/ slotted screws
- Lid options:
  - "Communication" embossed
  - "TV" embossed

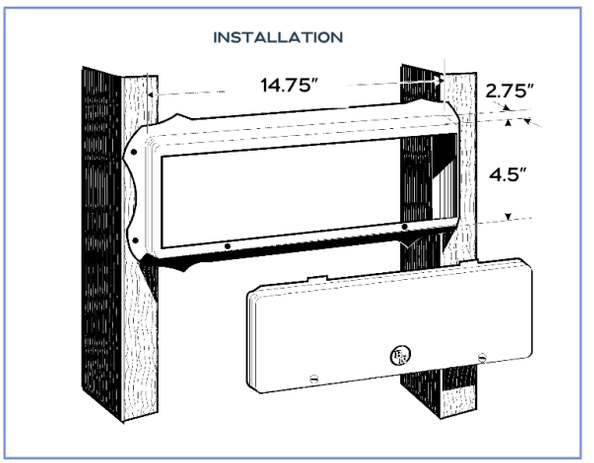

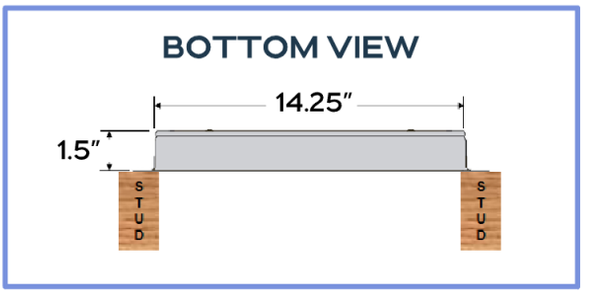

1020 Series Model #	Description
1020	14-1/4″ exterior semi-recessed enclosure; "Communications" embossed lid
1020TV	14-1/4″ exterior semi-recessed enclosure; "TV" embossed lid
(Lid Only) Model #	**Description**
1020B	"Communications" embossed lid only
1020B-TV	"TV" embossed lid only

1100 Series — 14-3/4″ Width X 11″ Height X 5-9/16″ Depth

Exterior Mounted Enclosure for Residences

Features:

- Fully enclosed lid, secured using two screws
- Constructed of 20 gauge zinc-coated steel with powder-coat tan finish
- Open top and bottom to the inside wall
- UL listed (UL 1863); designed to NEMA 3R
- Box weight: 6 lbs.

1100 Series Enclosures Include:

- Plywood backboard for mounting utility equipment
- Choice of zinc-coated steel lid
  - "Communication" embossed (standard)
  - "TV" emboss available
- Available with optional #4-14 wire ground bar

1100 SERIES

BOTTOM VIEW - EXPANDED

*SIDE VIEW - COMPACT

1100C-E

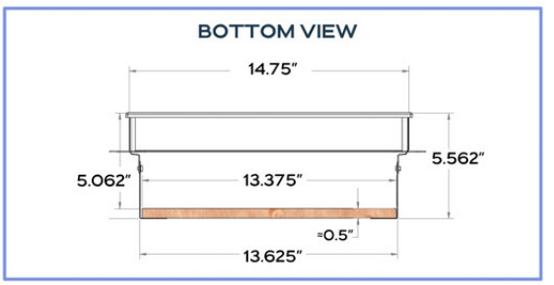

* This model ships in a compact configuration and is expanded to full depth upon installation, which requires less space to store and to ship this enclosure

1100 Series Model #	Description	
1100C-E	Exterior semi-recessed enclosure with plywood back; "Communication" embossed lid	UL LISTED
1100C-E-TV	Exterior semi-recessed enclosure with plywood back; "TV" embossed lid	
Ground Bar Model #	**Description**	
1100C-E-G	1100C-E Enclosure; includes #4-14 wire ground bar	UL LISTED
1100C-E-G-TV	1100C-E-TV Enclosure' inlcudes #4-14 wire ground bar	

14326 Series Fiber-to-Home Enclosures — 14″ Width X 32″ Height X 6.5″ Depth

Top Seller!

FTTP-Ready Service Boxes for the Smart Home

14326W-UL

Features:

- Fully enclosed; Options include:
  - Lid fastened with 4 zinc-coated metal screws
    - Insulated lid available
  - Hinged door (non-removable)
- Constructed of 18 gauge zinc-coated steel with tan powder-coat finish
- UL listed (UL 1863); designed to NEMA 3R
- Enclosure mounts between 16″ center studs
- Open top & bottom to inside wall
- Box weight:
  - 14326W-UL 25 lbs.
  - 14326WH-UL 26.95 lbs

Enclosures Include:

- Plywood (≈ 1/2″) backboard for mounting utility equipment
- #4-14 wire ground bar

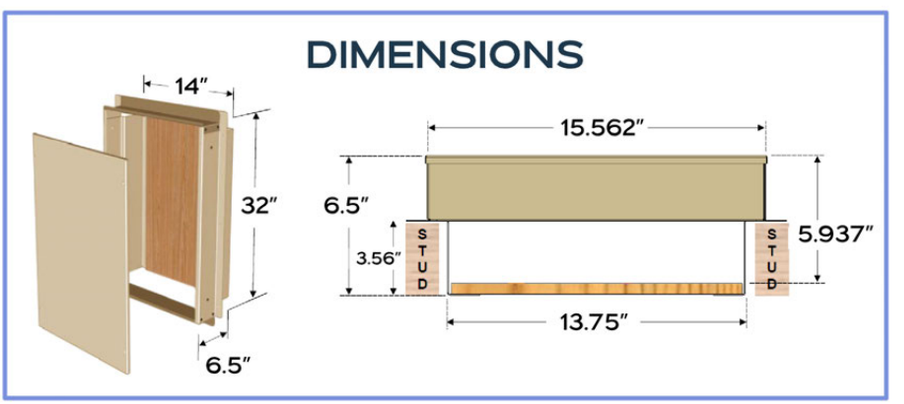

FTTP Box Model #	Description	
14326W-UL	Exterior semi-recessed enclosure with plywood back; "Communication" embossed lid	UL LISTED
14326WH-UL	Exterior semi-recessed enclosure with plywood back; Hinged (non-removable) door	
14326WIN-UL	Exterior semi-recessed enclosure with plywood back; "Communication" embossed lid with climate-protective insulation	

14155W-UL — 14″ Width X 15″ Height X 5.75″ Depth

Features:

- Fully enclosed
- Body constructed of 18 gauge zinc-coated steel with powder-coat tan finish
- 18 gauge hinged door with 7/16″ recessed hex latch
- UL listed (UL 1863); designed to NEMA 3R
- Box weight: 18 lbs.

Included:

- 3/4″ plywood backboard for mounting utility equipment
- 2 knockouts for 2″ conduit & 3 knockouts for 1″ conduit

DIMENSIONS | KNOCKOUT PATTERN

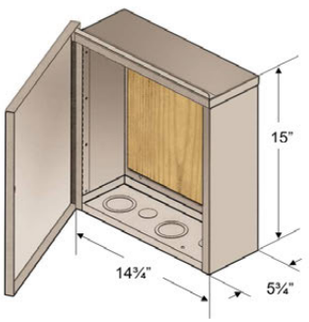

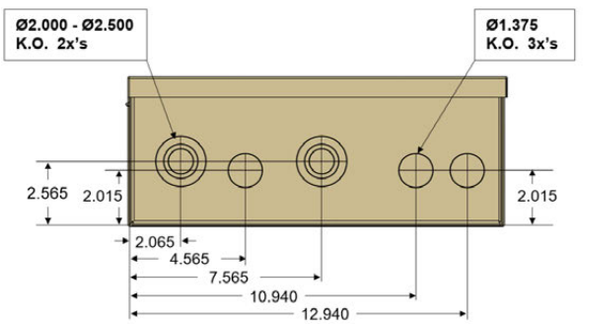

14244W-SM — 14″ Width X 24″ Height X 4″ Depth

Features:

- Fully enclosed
- Body constructed of 16 gauge zinc-coated steel with powder-coat tan finish
- Reinforced hinged door with 7/16″ recessed hex latch
- UL listed (UL 1863); designed to NEMA 3R
- Box weight: 28 lbs.

Included:

- 1/2″ plywood backboard for mounting utility equipment
- 2 knockouts for 3/4″ - 1-3/4″ conduit & 3 knockouts for 3/4″ - 1-1/4″ conduit

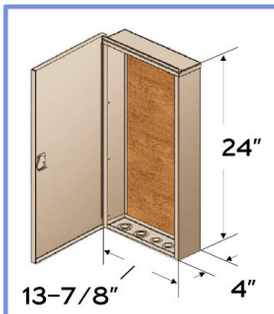

DIMENSIONS & KNOCKOUT PATTERN

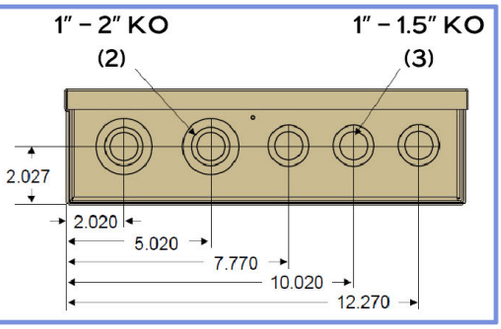

14324W-SM — 14″ Width X 32″ Height X 4″ Depth

Features:

- Fully enclosed
- Constructed of 16 gauge zinc-coated steel with powder-coat tan finish
- Reinforced hinged door with 7/16″ recessed hex latch
- "Communications" embossed cover
- UL listed (UL 1863); designed to NEMA 3R
- Box weight: 34 lbs.

Included:

- 1/2″ plywood backboard for mounting utility equipment
- 4-position #4-14 wire ground bar
- 2 knockouts for 3/4″ and 1-3/4″ conduit & 3 knockouts 3/4″ and 1-1/4″ conduit

14324W-SM

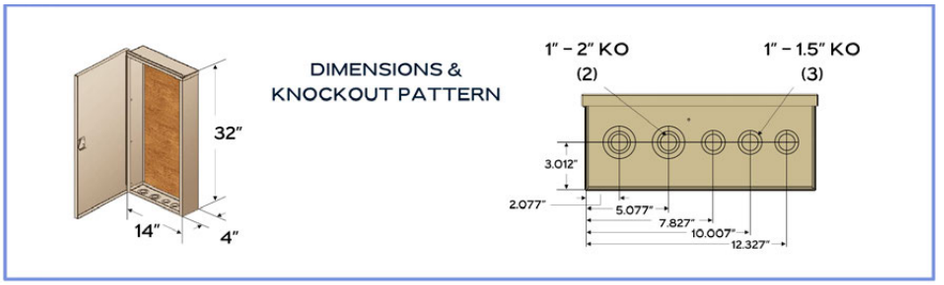

14326W-SM — 14″ Width X 32″ Height X 6.5″ Depth

Features:

- Fully enclosed
- Constructed of 16 gauge zinc-coated steel with powder-coat tan finish
- Reinforced hinged door with 7/16″ recessed hex latch
- "Communications" embossed cover
- UL listed (UL 1863); designed to NEMA 3R
- Box weight: 37 lbs.

Included:

- 1/2″ plywood backboard for mounting utility equipment
- 4-position #4-14 wire ground bar
- 2 knockouts for 3/4″ and 1-3/4″ conduit & 3 knockouts 3/4″ and 1-1/4″ conduit

14326W-SM

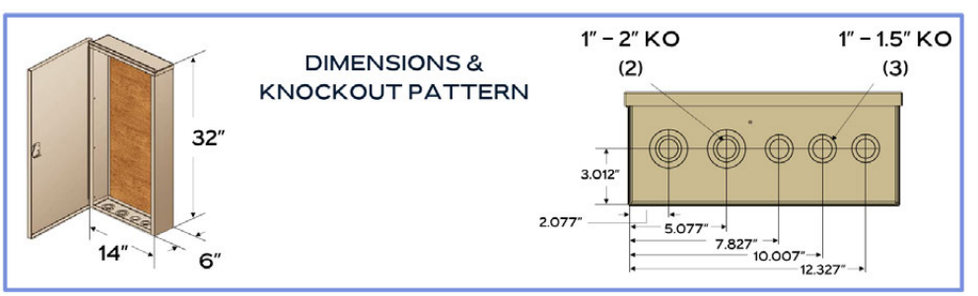

24268W-UL — 24″ Width X 26″ Height X 8″ Depth

Features:

- Fully enclosed
- Constructed of 16 gauge zinc-coated steel with powder-coat tan finish
- Reinforced hinged door with 7/16″ recessed hex latch
- "Communications" embossed cover
- UL listed (UL 1863); designed to NEMA 3R
- Box weight: 53 lbs.

Included:

- 3/4″ plywood backboard for mounting utility equipment
- 4-position #4-14 wire ground bar
- 2 knockouts for 3/4″ and 2″ conduit & 10 knockouts 3/4″ and 1-1/2″ conduit

24268W-UL

30″ Surface Mount Enclosures — 30″ Width X 36″ Height

Features:

- Fully enclosed
- Constructed of 14 gauge zinc-coated steel with powder-coat tan finish
- Reinforced hinged door with 7/16″ recessed hex latch
- "Communications" embossed cover
- 30368W-UL is UL listed; designed to NEMA 3R
- Box weight: 85 lbs.

Included:

- 3/4″ plywood backboard for mounting utility equipment
- 2 knockouts for 3/4″ and 2″ conduit & 10 knockouts 3/4″ and 1-1/2″ conduit
- 4-position #4-14 wire ground bar

30368W-UL

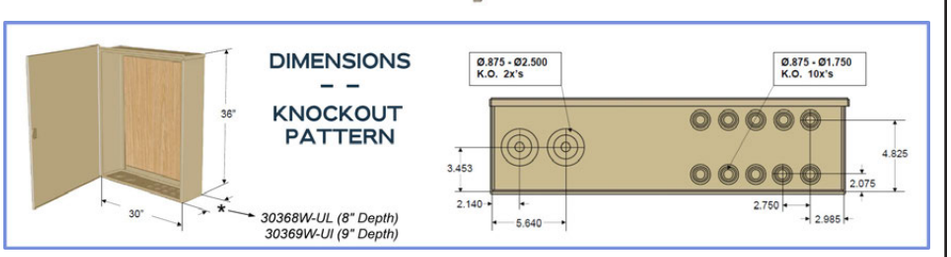

Model #	Description	
30368W-UL	Exterior surface-mount enclosure with 3/4″ plywood; embossed lid / 8″ D	UL LISTED
30369W-UL	Exterior surface-mount enclosure with 3/4″ plywood; embossed lid / 9″ D	

A Legacy of Ingenuity, Built on Care and Expertise

For 100 years, from my great-grandfather Rollie Nawman's patented telephone booth to pioneering North America's first portable rebar tools, the goal of our family has been to solve problems with ingenuity and care.

My personal journey reflects this commitment. Before joining the family business, I spent eight years as a Certified Child Life Specialist, helping children and families navigate complex hospital environments. That experience taught me the profound value of empathy, clarity, and anticipating needs—skills I brought with me when I officially rejoined the company in 2008.

Starting in Customer Service, I learned our business from the ground up: processing orders, working trade shows, and most importantly, listening directly to our customers. I then spent 12 years developing and running our e-commerce sister company, gaining hands-on expertise in website design, inventory management, and streamlined buying experiences. This background grounded me in the efficiency and accountability needed to deliver on our promises.

Now, as the fourth-generation CEO, following my father, Edward Kientz, and alongside my brother, President Erik Kientz, I am honored to lead Benner-Nawman into its next century.

As you turn the pages of this catalog, you will see our commitment in action. Our dedicated focus to the low-voltage electrical industry means that every product, process, and person on our team is relentlessly committed to your success. We are here to build reliable, game-changing products that help you win on the job site, just as my family always has.

Welcome to the next era of Benner-Nawman.

Best Regards,

Heidi Ross

Heidi Ross, Chief Executive Officer
Benner-Nawman, Inc.

If you are looking for assistance in becoming a sales partner with Benner-Nawman, or general information about acquiring Benner-Nawman products, please contact our regional sales territory representatives from the directory below for immediate assistance.

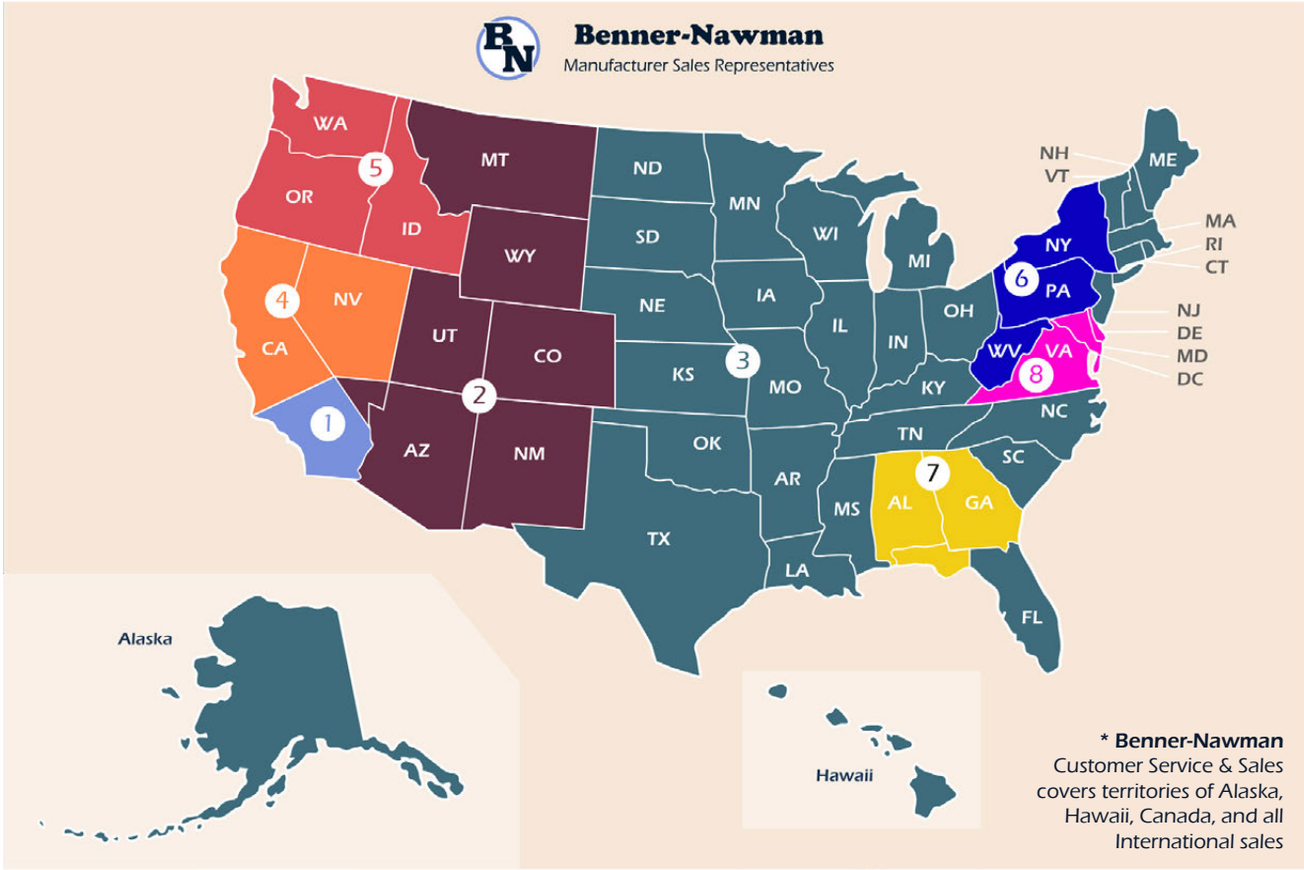

1 **Blanchard Associates** (Ontario, CA)
(909) 974-0111
jblanchard@blanchardassociates.com

2 **Gerrish Sales Agency** (Las Vegas, NV)
(702) 769-7333
gerrishsales@aol.com

3 **Benner-Nawman Customer Service & Sales***
(800) 992-3833
mail@bnproducts.com

4 **D.Z. Cook Company** (Hayward, CA)
(510) 293-6810
dfirsching@dzcook.com | **dzcook.com**

5 **Taylored Sales & Marketing** (Lake Oswego, OR)
(503) 714-1500
sales@tayloredsalesandmarketing.com
tayloredsalesandmarketing.com

6 **Ash Industries** (Canandaigua, NY)
(585) 734-7377
ashindustries@msn.com
ashindustriesusa.com

7 **Franklin Sales** (Lawrenceville, GA)
(770) 280-7588
john@franklinsales.net
franklinsales.net

8 **W.E. Sullivan Company** (Richmond, VA)
(804) 273-0905
bruce@wesullivanco.com
wesullivanco.com

Join the Benner-Nawman Team

Interested in carrying Benner-Nawman products in your business? Get started today by completing our online credit application. Reach out to our Benner-Nawman Corporate team by calling **(800) 992-3833**, or submit a letter of interest to **mail@bnproducts.com**

BN Credit Application

36″ Surface Mount Enclosures — 36″ Width X 36″ Height

Features:

- Enclosed; constructed of 14 gauge zinc-coated steel with powder-coat tan finish
- Reinforced hinged door with 7/16″ recessed hex latch
- "Communications" embossed cover
- UL listed (UL 1863); designed to NEMA 3R
- Box weight: 115 lbs.

36368W-UL

Included:

- 3/4″ plywood backboard for mounting utility equipment
- 4-position #4-14 wire ground bar
- 2 knockouts for 2″ and 3″ conduit & 10 knockouts 1″ and 1-1/2″ conduit

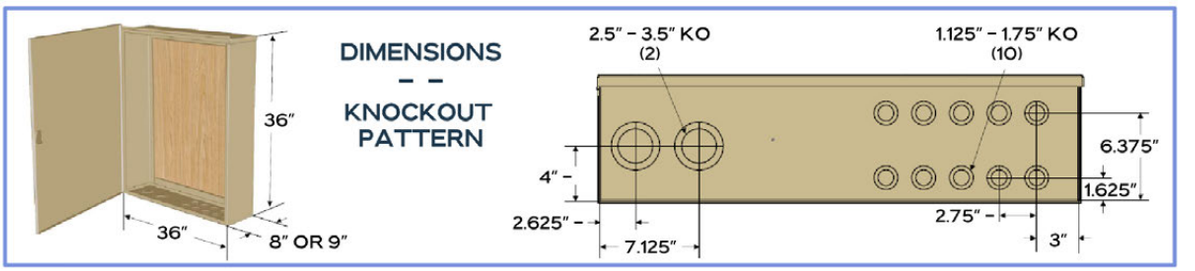

Model #	Description	
36368W-UL	Exterior surface-mount enclosure with 3/4″ plywood; embossed lid / 8″ D	UL LISTED
36369W-UL	Exterior surface-mount enclosure with 3/4″ plywood; embossed lid / 9″ D	

363612W-UL — 36″ Width X 36″ Height x 12″ Depth

Features:

- Fully enclosed
- Constructed of 14 gauge zinc-coated steel with powder-coat tan finish; "Communications" embossed cover
- Reinforced hinged door with 7/16″ recessed hex latch
- UL listed (UL 1863); designed to NEMA 3R
- Box weight: 129 lbs.

363612W-UL

Included:

- 3/4″ plywood backboard for mounting utility equipment
- 2 knockouts for 3″ and 4″ conduit & 10 knockouts 1″ and 1-1/2″ conduit
- 4-position #4-14 wire ground bar

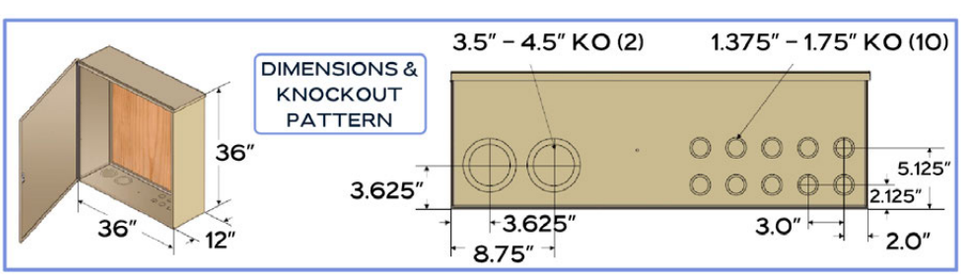

UL LISTED

48489W-UL — 48″ Width X 48″ Height X 9″ Depth

Features:

- Enclosed; constructed of 14 gauge zinc-coated steel with powder-coat tan finish
- Our largest enclosure for commerical applications
- Reinforced hinged door with 7/16″ recessed hex latch
- "Communications" embossed cover
- UL listed (UL 1863); designed to NEMA 3R
- Box weight: 190 lbs.

Included:

- 3/4″ plywood backboard for mounting utility equipment
- 4-position #4-14 wire ground bar
- 2 knockouts for 2″ and 3″ conduit & 10 knockouts 1″ and 1-1/2″ conduit

48489W-UL

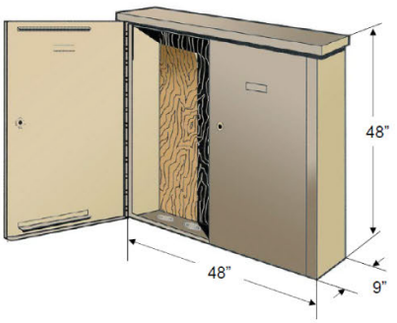

DIMENSIONS
– –
KNOCKOUT PATTERN

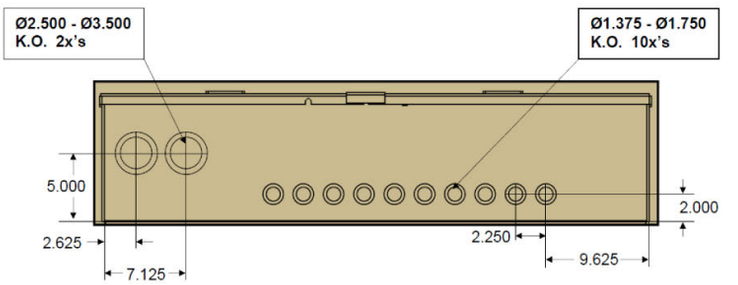

ELECTRICIAN TOOLS

SPECIALTY TOOLS FOR THE ELECTRICAL CONTRACTOR

Socket Tools

UP-B10 Can Wrench

- Telecom and data device applications; two-in-one tool:
  - Standard 7/16″ hex socket tool used to open/close most telcommunication boxes and enclosures
  - Opposite end is a 3/8″ hex socket used on most standard binding post terminals
- Both hardened heat-treated alloy steel sockets are 1-1/4″ (32mm) deep and are thin-walled to easily fit into tight spaces
- Tool shaft constructed of high-impact molded plastic

Cable and Wire Cutters

UP-B41 Our Original Clean Cutter for Copper or Aluminum multi-strand cable

- The trusted UP-B41 will cut up to 50-pair communication cable, 1/0 soft copper or 2/0 aluminum multi-strand cable - with a comfortable, easy grip
- Ideal for communications, electrical and industrial applications
- Made from heavy duty forged steel and heat-treated for long life
- The patented offset bite cuts without compression or frayed ends
- Not designed for cutting steel, ferrous, or ACSR materials

UP-B240 The Shark! Hi-Leverage 10″ Copper/Aluminum Cutter

- Razor sharp cutting blades will cut up to 100-pair telephone cable, 2/0 soft copper or 4/0 aluminum multi-strand cable.
- Made from forged steel and heat-treated for long life
- Specially designed precision ground cutting blades cut through cable with less effort, using high-leverage soft grip
- Not designed for cutting steel, ferrous, or ACSR materials

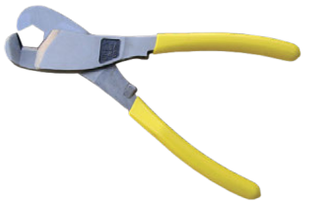

UP-B76 The Banana Cutter - for 3/4″ Coaxial Cable

- Ideal for one-hand cable shearing through coaxial cable for clean cuts
- Patented precision-curved blades are extremely sharp and designed to cut at 360° around coaxial cable; cuts up to 3/4″ diameter aluminum or copper cable
- 8-1/4″ overall length provides excellent leverage
- Made from heavy duty forged steel and heat-treated for long life
- Not designed for cutting steel, ferrous, or ACSR materials

UP-B95 Larger Blade Jaws for up to 1″ Coaxial Cable

- Ideal for one-hand cable shearing through coaxial cable for clean cuts
- Patented precision-curved blades are extremely sharp and designed to cut at 360° around coaxial cable; cuts up to 1″ diameter aluminum or copper cable
- 8-1/4″ overall length provides excellent leverage
- Made from heavy duty forged steel and heat-treated for long life
- Not designed for cutting steel, ferrous, or ACSR materials

UP-B606-SO Ultra-Sharp Scissor set for light-gauge wire and fiber optic cable

- Micro-serrated stainless steel blades prevent wires from slipping during cut
- Blade notch included for wire-stripping applications
- Soft, comfortable grips are ideal for repetitive use

UP-B606 Ultra-Sharp Scissor set for light-gauge wire and fiber optic cable

- Includes stainless steel UP-B606-SO wire-cutting scissors for light-gauge applications
- Ideal 3-piece set for communications craftsmen - Set includes:

  - Stainless wire cutting scissors

  - Sheath knife

  - Leather pouch (may be used as belt attachment)

Cable and Wire Cutters

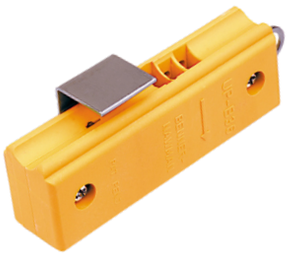

UP-B36 4″ Cable Slitter

- This handy tool is used for slitting 1, 2, and 5-pair buried or overhead drop-wire and for sheathing up to 25-pair communication cable and fiber optics
- There are no exposed blades virtually eliminating the risk of an injury or accident
- This tool takes interchangeable and replaceable cutting edges to assure a sharp cut every time

- UP-50475 Replacement blades are available from Benner-Nawman in 5-packs

Drivers

UP-B60 Speed Driver

- Save time and strain with this crank-style flathead screwdriver
- Ideal for receptacle trim, switches, and ceiling fans
- Hardened tip outlasts most drivers
- Robertson tipped version available: Part # UP-B61

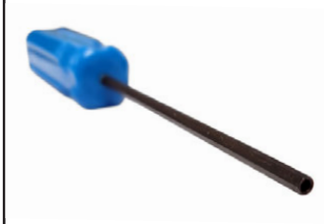

UP-B22 Security Driver for 5/32″ Fasteners

- This tool is used in the communication industry on pin-in-head tamper resistant (5/32″) fasteners
- Fasteners are typically used in pre-wire boxes and enclosures mounted on the outside of buildings
- Tool is constructed with 4¾″ carbon-finished shaft and a tough 3½″ blue ABS plastic handle.

Wire Pulling and Threading

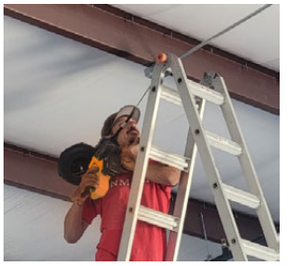

BNEFT 24V Wire Pulling Machine Battery Operated Fish Tape

- Save time and effort with a tool that will thread cabling through pipe or conduit up to 130 feet per minute, with 22-lbs. of pulling force
- High-quality brushless motor; two 24V batteries are included
- Flexible steel guide and cable easily slides through most pipe and conduit
- Variable speed trigger control and adjustable clutch to control push/pull strength to protect wiring
- Developed to provide maximum comfort, quality, and mobility
- More Features:
  - 91 ft. cable < 1/4″ diameter
  - Lightweight 6.6 lbs. w/o battery
  - 4-hour battery life w/ LED indicator
  - Quiet, brushless motor

PROTECT and LABEL RJ45 Networking and Fiber Optic Ports

" A place where there are ports to label...
...Is a great place for a Trunktie! "

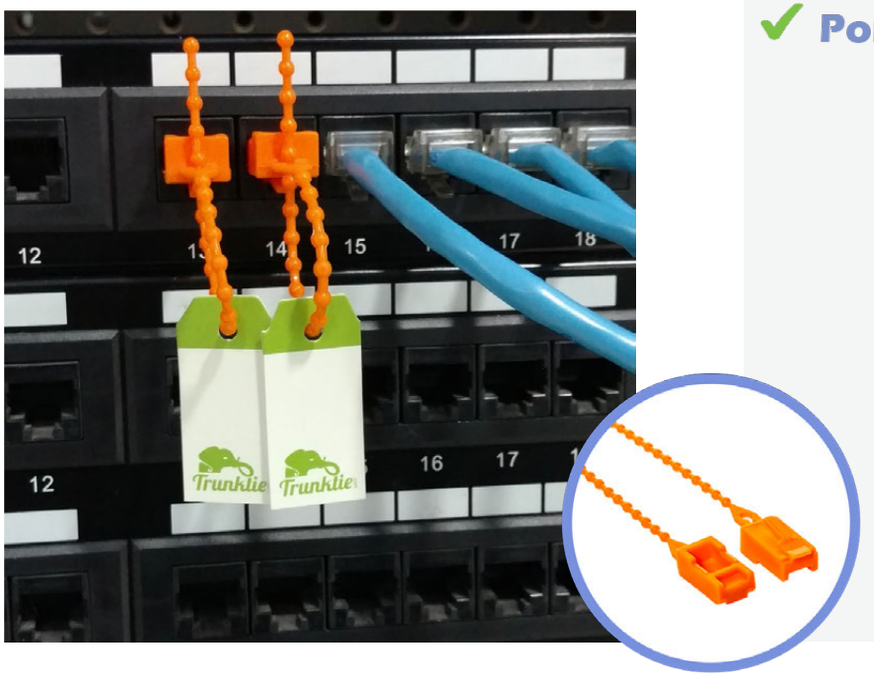

✔ **Panel Connections Labeled**

✔ **Ports Protected and Clean**

- Server Rooms
- Equipment Relocations
- Smart Home Construction
- Multi-Tenant Buildings

"Saved Our Company Hundreds of Dollars!"

-Anne S., Nevada

"Why Didn't I Think of This?"

-Denver J., Amazon User

Ethernet RJ45 Port

Fiber Optic Duplex LC Port

Fiber Optic SC Port

Available in Natural White and Orange Colors (SC Fiber Optic available in Orange or Yellow)

What is Trunktie® ?

Trunkties are designed to label open network ports on RJ45 or fiber optic panels for any commerical or home IT or telecom needs. Trunkties are a very simple concept - yet invaluable for labeling connections - and importantly - keeping ports free of dust and debris!

Ethernet RJ45 Trunktie®

Great For:

- Equipment Relocation
- Server Rooms
- Office & Home
- Technician Communication

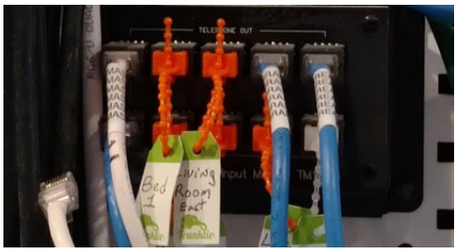

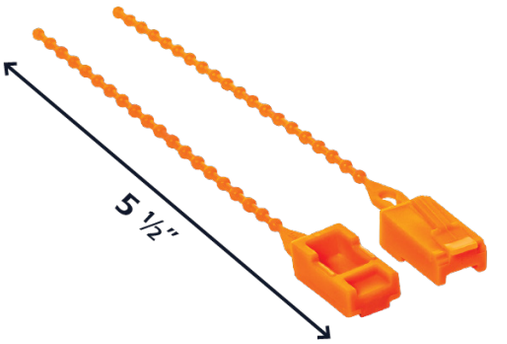

Model #	Color	Quantity/PKG
TT25-NATWHT	NATURAL WHITE	25
TT25-ORANGE	ORANGE	25

Fiber Optic Trunktie® - Duplex LC Port

CABLING INNOVATORS AWARDS

Great For:

- Protection & Label for any LC fiber port
- Office & Home
- Technician Communication

Model #	Color	Quantity/PKG
FLC15-NATWHT	NATURAL WHITE	15
FLC15-ORANGE	ORANGE	15

Fiber Optic Trunktie® - SC Port

Great For:

- Protection & Label for any single SC port
- Office & Home
- Technician Communication

Model #	Color	Quantity/PKG
FSC25-YELLOW	YELLOW	25
FSC25-ORANGE	ORANGE	25

Cases: 10 Packs Available

- Mix & Match colors in pack quantities
- Save - purchase in volume
- All Trunktie® Types

BNCE-20

The Cutting Edge Saw™ - Corded Model - Cuts up to #6 rebar and threaded rod up to 7/8 inch - A protective case is included - Each Cutting Edge Saw™ is protected by a one year warranty from the date of purchase, and includes two spare blades

BNCE-20C-24V

The Cutting Edge Saw™ - Cordless/Brushless Model - Cuts up to #6 rebar and threaded rod up to 7/8 inch - A protective case is included - Each Cutting Edge Saw™ is protected by a one year warranty from the date of purchase, and includes two spare blades

BNCE-30

The Cutting Edge Saw™ - Corded Model - Cuts rebar up to #8 (1″), and a variety of materials including all-thread rod (up to 1-1/8″), conduit, pipe, tubing, and more. Each BNCE-30 Cutting Edge Saw has a one year warranty from the date of purchase, and includes two spare blades, and a protective carrying case

BNCE-30C-24V

The Cutting Edge Saw™ - Cordless/Brushless Model - Cuts rebar up to #8 (1″), and a variety of materials including all-thread rod (up to 1-1/8″), conduit, pipe, tubing, and more. Each BNCE-30 Cutting Edge Saw has a one year warranty from the date of purchase, and includes two spare blades, and a protective carrying case

Great for 1-5/8″ Strut!

BNCE-45

The Cutting Edge Saw™ - Corded Model - Cuts rebar up to #11, and a variety of materials including all-thread rod, conduit, pipe, and 1-5/8″ strut. Each BNCE-45 Cutting Edge Saw has a one year warranty from the date of purchase, and includes two spare blades, and a protective carrying case

Great for 1-5/8″ Strut!

BNCE-45-24V

The Cutting Edge Saw™ - Cordless Model - Cuts rebar up to #11, and a variety of materials including all-thread rod, conduit, pipe, and 1-5/8″ strut. Each BNCE-45 Cutting Edge Saw has a one year warranty from the date of purchase, and includes two spare blades, and a protective carrying case

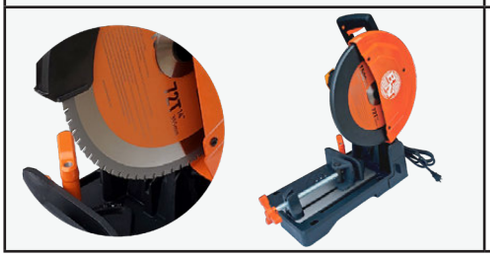

BNCE-130

The Cutting Edge Saw™ - Chop Saw - Cold cutting technology - the hallmark of the Cutting Edge™ brand - arrives in the form of a stationary saw to cut larger round tubing and rod - up to 5″ at 90° using a 14″ TCT blade - safely and easily outperforming abrasive wheels.

Cutting Edge™ Replacement Blades	
RB-BNCE-20PS	Pro Series CERMET II Premium Blade for BNCE-20 Cutting Edge Saw™
RB-BNCE-30PS	Pro Series CERMET II Premium Blade for BNCE-30 Cutting Edge Saw™
RB-BNCE-20PS5	Pro Series CERMET II Premium Blade for BNCE-20 Cutting Edge Saw™ 5 PACK
RB-BNCE-30PS5	Pro Series CERMET II Premium Blade for BNCE-30 Cutting Edge Saw™ 5 PACK
RB-BNCE-KNH	110mm Blade for the BNCE-20 Cutting Edge Edge Saws™
RB-BNCE-MESH	110mm Mesh Blade for BNCE-20 Cutting Edge Saws™
RB-BNCE-30	125mm TCT Blade for the BNCE-30 Cutting Edge Saws™
RB-BNCE-45	165mm Blade for the BNCE-45 Cutting Edge Saws™
RB-BNCE-45S	165mm Special Strut cutting blade for the BNCE-45 Cutting Edge Saws™
RB-BNCE-130	Replacement Blade for the BNCE-130 Cutting Edge Saw™
Cutting Edge™ Battery Replacement Products	
BNCE-24VLI-4C	Replacement Battery 24V Li-ion 4.0Ah
BNCE-24VCHGR-120C	Replacement Battery Charger for the BNCE-24VLI battery

RB-BNCE-130 14″ Blade

BNCE-24VCHGR-120C Charger & BNCE-24VLI-4C Battery

Replacement Blades for BNCE-20 / 30

Ferrous & Non-Ferrous Metals - Cold-Cutting Multi-Material Saws

REBAR - ALL-THREAD - CONDUIT - STRUT - PIPES - PVC & MORE!

Burr-Free, Cool-to-Touch, Smooth Cuts - Every Time

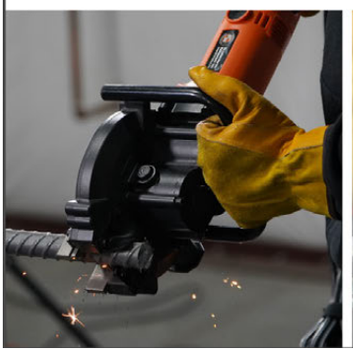

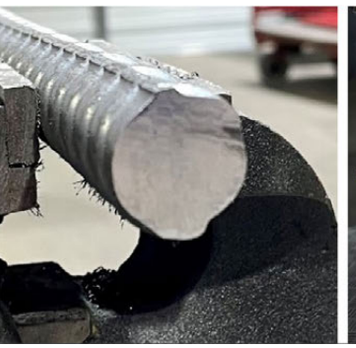

Generator Features

- Remote Start
- Electronic-Safe
- Auto Shut-Off
- Meets EPA Standards
- Fuel Type - Gasoline
- Eco Switch
- Key/Electric Start

BNG2300iSAC — 2300W Rated | 120V | 19A Max

BNG2300iSAC Inverter

- 120V 20A NEMA 5-20R
- Speed Regulation, Fuel Gauge, Low Oil Alert
- Lightweight - Just 44 lbs.
- Runtime - 6 Hours at 25% Load
- 62.0 dBA @ 23′ (7m); 62.0 dBA @ 23′ (7m)
- Parallel-Ready
- Stable, electronic-safe output, CO protection/shutoff

ENGINE
145cc OHV
5 HP

BNG2800iE — 2800W Rated | 120V | 23A Max

BNG2800iE Inverter

- 120V GFCI Duplex (20A)
- 120V 23A NEMA L5-30R
- Main Circuit Breaker
- Lightweight - Just 47 lbs.!
- Runtime - 9 Hours at 50% Load
- 58.0 dBA @ 23′ (7m)
- Stable, electronic-safe output

ENGINE
145cc OHV
5 HP

BNG3800iAEFIC — 3800W Rated | 120V | 31A Max

BNG3800iAEFIC Inverter

- (1) 120V GFCI Duplex (20A), (1) 120V 30A
- (1) DC 12V, Digital Smart LCD DIsplay
- CO protection/shutoff
- Speed Regulation, Fuel Gauge, Low Oil Alert
- Runtime - 9 Hours at 25% Load
- Remote Start, Auto-Start/Stop interface
- Stable, electronic-safe output
- 62 lbs. (28.1 kg); Telescoping handle extends from front of generator

EFI ELECTRIC FUEL INJECTION

ENGINE
160cc OHV
5 HP

BN Products-USA™

CAREER TOOLS FOR THE PROFESSIONAL

2300 - 3800
WATTS

INVERTER GENERATOR ACCESSORY

BNGPB
PARALLEL KIT

USE WITH
BNG2300iSAC
BNG2800iE
BNG3800iAEFIC

2X DOUBLE YOUR POWER

Did You Know?

BNG3800iAEFIC

Two-Wire **Auto Gen Start**
*Cabling Included

The **BNG3800iAEFIC** Inverter features a **2-wire auto generator start (AGS)** feature? AGS is a remote control capability that allows an external device, such as an automatic transfer switch, or battery monitor, to **automatically start and stop** a generator using a simple, low-voltage, two-wire connection.

BNG5500iE — 5000W Rated | 120/240V | 41A Max

BNG5500iE Inverter

- 120V GFCI Duplex (20A)
- 120/240V 30A NEMA L14-30R
- USB Type A & Type C
- Digital Smart LCD Display
- Runtime - 10 Hours at 50% Load
- 62.0 dBA @ 23′ (7m)
- Stable, electronic-safe output
- Telescoping handle extends from front of generator
- CO monitoring & protection

ECO

ENGINE
312cc OHV
8.5 HP

GASOLINE CONVENTIONAL MODELS

BNG3000 — 3000W Rated | 120/240V | 25A Max

BNG3000 Generator

- 120V GFCI Duplex (20A)
- 120V 25A NEMA L5-30R
- 12V DC 8.3A
- Main Circuit Breaker
- Never-flat Wheel Kit
- Runtime - 12 Hours at 50% Load
- 69.5 dBA @ 23′ (7m)

ENGINE
223cc OHV
7 HP

BNG5000 — 5000W Rated | 120/240V | (2 X 20A) Max

BNG5000 Generator

- 120V GFCI Duplex (20A)
- 120/240V 15A NEMA L14-30R
- 12V DC 8.3A
- Main Circuit Breaker
- Never-flat Wheel Kit
- Runtime - 12 Hours at 50% Load
- 75.5 dBA @ 23′ (7m)

ENGINE
389cc OHV
15 HP

BNG6500 — 6500W Rated | 120/240V | (2 X 27A) Max

BNG6500 Generator

- 120V GFCI Duplex (20A)
- 120/240V 30A NEMA L14-30R
- 12V DC 8.3A
- Main Circuit Breaker
- Never-flat Wheel Kit
- Runtime - 12 Hours at 50% Load
- 77.0 dBA @ 23′ (7m

ENGINE
420cc OHV
15 HP

BNG7500

7500W Rated | 120/240V | (2 X 31.25A) Max

BNG7500 Generator

- 120V GFCI Duplex (20A)
- 120/240V 30A NEMA L14-30R
- 12V DC 8.3A
- Main Circuit Breaker
- Never-flat Wheel Kit
- Runtime - 12 Hours at 50% Load
- 79.5 dBA @ 23′ (7m)

ENGINE
460cc OHV
16 HP

BNG7500-D4

7500W Rated | 120/240V | (2 X 31.25A) Max

BNG7500-D4 Generator

- 120V GFCI Duplex (20A) | 2 Pair
- 120/240V 31.25A NEMA L14-30R
- 12V DC 8.3A
- Main Circuit Breaker
- Never-flat Wheel Kit
- Runtime - 12 Hours at 50% Load
- 79.5 dBA @ 23′ (7m)

Not for Sale in California

ENGINE
460cc OHV
16 HP

BNG9000

9000W Rated | 120/240V | (2 X 37.5A) Max

BNG9000 Generator

- 120V GFCI Duplex (20A) | 2 Pair
- 120/240V 37.5A NEMA 14-50R
- 12V DC 8.3A
- Main Circuit Breaker
- Never-flat Wheel Kit
- Runtime - 12 Hours at 50% Load
- 79.5 dBA @ 23′ (7m)

ENGINE
460cc OHV
16 HP

Conventional Generator Features

Meets EPA Standards | Auto Shut-Off | Key or Electric Start | Fuel - Gasoline

360° FOLDING WORK LIGHT WITH TRIPOD

BNLB-24360 Hybrid LED Light

DESIGN AWARD 2022

This award-winning work light provides 360° ultra-bright (up to 5000 net lumens) illumination without glare, providing great visibility and safety in dark conditions. The light set and power cord are suited for both indoor and outdoor use. Features include:

- Compact design with retractable tripodand carrying handle; allows for setup in seconds and stability required for job safety
- HYBRID POWER: Up to 18 hours of continual use with single battery charge; 10′ power cord
- Folds into a compact position
- Expands to 54″ high
- Sturdy ABS construction
- Steel Tripod
- 24V Li-Ion battery & 120V charger included

3.6V LED Utility Light & Portable Power Bank

BNL-36 LED Light & Charging Bank

- LED work light with an output of up to 1000 net lumens for great visibility
- Six lighting modes using 6500K cool white light -OR- diffused yellow light; Includes SOS/strobe mode for high alert applications
- Great for camping, auto repair, shop utility, and countless other uses
- The BNL-36 is a utility light that weights just one point, and belongs in every vehicle and tool kit

THE MOST TRUSTED NAME IN REBAR TOOLS

BN Products-USA™

See More Construction Tools & Equipment:

Visit BNProducts.com

Scan QR Code for Complete Catalog

Benner-Nawman

A Century of Experience

"Benner and Nawman" was initially founded as a sheet metal fabricator in Oakland, CA in 1925. Now in business for more than a century, our companies have evolved to service the ever-changing needs of industrial products and business requirements.

Our experience extends through our growth as custom equipment fabricator through the second World War, formally incorporating as "Benner-Nawman, Inc." in 1946. After the war, Benner-Nawman began to produce telephone booths and equipment, and quickly became North America's leading provider of payphone housings and enclosures for over 50 years.

Benner-Nawman entered the construction industry during the 1980s, starting as the exclusive U.S. Partner of Diamond®-brand rebar shears and bending machines, continually developing a product family of concrete tools for the professional contractor, to the present day.

BN Products-USA™ incorporated in 2011 as a distinct division with a primary focus on construction equipment and rebar tools. Benner-Nawman remains specialized in the electrical wholesale market, supplying low-voltage enclosures and related electrical tools.

Corporate Offices and Distribution

Today, Benner-Nawman companies use a network of regional manufacturer representatives, and our corporate Sales team, to promote our products across North America.

Our corporate offices and warehouse facilities are located in a 65,000 square foot location on seven acres, in the Industrial Air Park of Wickenburg, Arizona. National trucking and shipping companies deliver and accept shipments on a daily basis.

Benner-Nawman.com

Benner-Nawman, Inc.
(800) 992-3833
mail@BNProducts.com

Product Catalog