

TOTO WASHLET®

FIT CHART

WASHLET® COMPARISON CHART

		S7A			S7			*KS6	S5	
		ELONGATED		ROUND	ELONGATED		ROUND	ELONGATED	ELONGATED	
		CONTEMPORARY	CLASSIC	CONTEMPORARY	CONTEMPORARY	CLASSIC	CONTEMPORARY			
		SW4736AT40#01 (Cotton #01) **$2,005**	SW4734AT40#01 (Cotton #01) **$2,005**	SW4735#01 (Cotton #01) **$2,005**	SW4726AT40#01 (Cotton #01) **$1,826**	SW4724AT40#01 (Cotton #01) **$1,826**	SW4725#01 (Cotton #01) **$1,826**	SW3946#01 (Cotton #01)	SW3446#01 (Cotton #01) **$974**	
		SW4736#12 (Sedona Beige #12) **$2,304**	SW4734#12 (Sedona Beige #12) **$2,304**		SW4726#12 (Sedona Beige #12) **$2,100**	SW4724#12 (Sedona Beige #12) **$2,100**			SW3446#12 (Sedona Beige #12) **$1,114**	
CLEANSE	REAR CLEANSE	●	●	●	●	●	●	●	●	
	SOFT REAR CLEANSE	●	●	●	●	●	●	●	●	
	FRONT CLEANSE	●	●	●	●	●	●	●	●	
	WIDE FRONT CLEANSE	●	●	●	●	●	●	—	—	
	OSCILLATING CLEANSE	●	●	●	●	●	●	●	●	
	PULSATING CLEANSE	●	●	●	●	●	●	●	●	
	INSTANTANEOUS WATER HEATING	●	●	●	●	●	●	●	●	
	WATER PRESSURE CONTROL	5 SETTINGS	5 SETTINGS	5 SETTINGS	5 SETTINGS	5 SETTINGS	5 SETTINGS	5 SETTINGS	5 SETTINGS	
	WATER TEMPERATURE CONTROL	5 SETTINGS	5 SETTINGS	5 SETTINGS	5 SETTINGS	5 SETTINGS	5 SETTINGS	3 SETTINGS	3 SETTINGS	
	WAND POSITION ADJUSTMENT	●	●	●	●	●	●	●	●	
HYGIENE	PREMIST	●	●	●	●	●	●	●	●	
	EWATER+® FOR BOWL	●	●	●	●	●	●	—	—	
	EWATER+® FOR WAND	●	●	●	●	●	●	●	●	
	WAND CLEANING MODE	●	●	●	●	●	●	●	●	
	SELF-CLEANING WAND	●	●	●	●	●	●	●	●	
	CLEAN RESIN FOR WAND & SEAT	●	●	●	●	●	●	●	●	
	REMOVABLE LID	●	●	●	●	●	●	●	●	
AIR	WARM AIR DRYER	●	●	●	●	●	●	●	●	
	AIR TEMPERATURE CONTROL	5 SETTINGS	5 SETTINGS	5 SETTINGS	5 SETTINGS	5 SETTINGS	5 SETTINGS	3 SETTINGS	3 SETTINGS	
	DEODORIZER	●	●	●	●	●	●	●	●	
SEAT	HEATED SEAT	●	●	●	●	●	●	●	●	
	HEATED SEAT TEMP CONTROL	5 SETTINGS	5 SETTINGS	5 SETTINGS	5 SETTINGS	5 SETTINGS	5 SETTINGS	3 SETTINGS	3 SETTINGS	
	SOFTCLOSE SEAT AND LID	●	●	●	●	●	●	●	●	
SENSOR	SEAT SENSOR	●	●	●	●	●	●	●	●	
	AUTOMATIC OPEN AND CLOSE LID	●	●	●	—	—	—	—	—	
	AUTOMATIC FLUSH	●**	●**	●**	●**	●**	●**	—	—	
	NIGHT LIGHT	●	●	●	●	●	●	●	●	
REMOTE	REMOTE CONTROL	●	●	●	●	●	●	●	●	
	REMOTE CONTROLLED SEAT	●	●	●	—	—	—	—	—	
ENERGY SAVING	ENERGY-SAVER TIMER	6, 9 HOURS	6, 9 HOURS	6, 9 HOURS	6, 9 HOURS	6, 9 HOURS	6, 9 HOURS	6, 9 HOURS	6, 9 HOURS	
	AUTO ENERGY SAVER	●	●	●	●	●	●	●	●	
	ON / OFF BUTTON	●	●	●	●	●	●	●	●	
RATED POWER USAGE		1290 W	1290 W	1295 W	1290 W	1290 W	1295 W	1278 W	1271 W	
LENGTH OF POWER CORD		3.9 ft (1.2 m)	3.9 ft (1.2 m)	3.9 ft (1.2 m)	3.9 ft (1.2 m)	3.9 ft (1.2 m)	3.9 ft (1.2 m)	3.9 ft (1.2 m)	3.9 ft (1.2 m)	
WAND FLOW RATE	REAR	0.08 - 0.11 gal/min	0.08 - 0.11 gal/min	0.08 - 0.11 gal/min	0.08 - 0.11 gal/min	0.08 - 0.11 gal/min	0.08 - 0.11 gal/min	0.07 - 0.11 gal/min	0.07 - 0.11 gal/min	0.0
	SOFT	0.08 - 0.11 gal/min	0.08 - 0.11 gal/min	0.08 - 0.11 gal/min	0.08 - 0.11 gal/min	0.08 - 0.11 gal/min	0.08 - 0.11 gal/min	0.07 - 0.11 gal/min	0.07 - 0.11 gal/min	0.0
	FRONT	0.08 - 0.11 gal/min	0.08 - 0.11 gal/min	0.08 - 0.11 gal/min	0.08 - 0.11 gal/min	0.08 - 0.11 gal/min	0.08 - 0.11 gal/min	0.08 - 0.11 gal/min	0.08 - 0.11 gal/min	0.0
	WATER TEMP	86°F - 104°F	86°F - 104°F	86°F - 104°F	86°F - 104°F	86°F - 104°F	86°F - 104°F	95°F - 104°F	95°F - 104°F	
DRYER	AIR TEMP	95°F - 140°F	95°F - 140°F	95°F - 140°F	95°F - 140°F	95°F - 140°F	95°F - 140°F	95°F - 140°F	95°F - 140°F	
	AIR VOLUME	8.83 ft^3/min	8.83 ft^3/min	8.83 ft^3/min	8.83 ft^3/min	8.83 ft^3/min	8.83 ft^3/min	8.83 ft^3/min	8.83 ft^3/min	
HEATED SEAT	SURFACE TEMP	82° F - 97° F	82° F - 97° F	82° F - 97° F	82° F - 97° F	82° F - 97° F	82° F - 97° F	82° F - 97° F	82° F - 97° F	
WATER SUPPLY PRESSURE		7.25 psi - 108.75 psi	7.25 psi - 108.75 psi	7.25 psi - 108.75 psi	7.25 psi - 108.75 psi	7.25 psi - 108.75 psi	7.25 psi - 108.75 psi	7.25 psi - 108.75 psi	7.25 psi - 108.75 psi	7.25
WATER SUPPLY TEMPERATURE		32°F - 95°F	32°F - 95°F	32°F - 95°F	32°F - 95°F	32°F - 95°F	32°F - 95°F	32°F - 95°F	32°F - 95°F	
AMBIENT TEMPERATURE		32°F - 104°F	32°F - 104°F	32°F - 104°F	32°F - 104°F	32°F - 104°F	32°F - 104°F	32°F - 104°F	32°F - 104°F	
PRODUCT SIZE		CONTEMPORARY	CLASSIC	CONTEMPORARY	CONTEMPORARY	CLASSIC	CONTEMPORARY	15-1/4" W x 20-13/16" D x 5-1/2" H	15" W x 21" D x 5-1/2" H	
		15-1/16" W x 20-7/8" D x 4-1/16" H	15-1/16" W x 20-7/8" D x 4-5/16" H	15-1/16" W x 19" D x 4-1/16" H	15-1/16" W x 20-7/8" D x 4-1/16" H	15-1/16" W x 20-7/8" D x 4-5/16" H	15-1/16" W x 19" D x 4-1/16" H			

NOTES: ● Included — Not Available ●** Optional upgrade with purchase of Auto-Flush Kit *ECOMMERCE only product

	S2		*KS5		*KS2		*KC2		S1	
ROUND	ELONGATED	ROUND	ELONGATED	ROUND	ELONGATED	ROUND	ELONGATED	ROUND	ELONGATED	ROUND
SW3445#01 (Cotton #01) **$974**	SW3346#01 (Cotton #01) **$775** SW3346#12 (Sedona Beige #12) **$891**	SW3345#01 (Cotton #01) **$775**	SW3216#01 (Cotton #01)	SW3215#01 (Cotton #01)	SW2336#01 (Cotton #01)	SW2335#01 (Cotton #01)	SW3024#01 (Cotton #01)	SW3023#01 (Cotton #01)	SW2326#01 (Cotton #01) **$597**	SW2325#01 (Cotton #01) **$597**
•	•	•	•	•	•	•	•	•	•	•
•	•	•	•	•	—	—	—	—	—	—
•	•	•	•	•	•	•	•	•	•	•
—	—	—	—	—	—	—	—	—	—	—
•	•	•	•	•	•	•	•	•	•	•
•	•	•	•	•	•	•	•	•	—	—
•	•	•	•	•	•	•	—	—	•	•
5 SETTINGS	5 SETTINGS	5 SETTINGS	5 SETTINGS	5 SETTINGS	5 SETTINGS	5 SETTINGS	5 SETTINGS	5 SETTINGS	5 SETTINGS	5 SETTINGS
3 SETTINGS	3 SETTINGS	3 SETTINGS	3 SETTINGS	3 SETTINGS	3 SETTINGS	3 SETTINGS	3 SETTINGS	3 SETTINGS	3 SETTINGS	3 SETTINGS
•	•	•	•	•	•	•	•	•	•	•
•	•	•	—	—	—	—	—	—	—	—
—	—	—	—	—	—	—	—	—	—	—
•	•	•	—	—	—	—	—	—	—	—
•	•	•	•	•	•	•	•	•	•	•
•	•	•	•	•	•	•	•	•	•	•
•	•	•	•	•	•	•	•	•	•	•
•	•	•	•	•	•	•	•	•	•	•
•	•	•	•	•	•	•	•	•	—	—
3 SETTINGS	3 SETTINGS	3 SETTINGS	3 SETTINGS	3 SETTINGS	3 SETTINGS	3 SETTINGS	3 SETTINGS	3 SETTINGS	—	—
•	•	•	—	—	—	—	—	—	—	—
•	•	•	•	•	•	•	•	•	•	•
3 SETTINGS	3 SETTINGS	3 SETTINGS	3 SETTINGS	3 SETTINGS	3 SETTINGS	3 SETTINGS	3 SETTINGS	3 SETTINGS	3 SETTINGS	3 SETTINGS
•	•	•	•	•	•	•	•	•	•	•
•	•	•	•	•	•	•	•	•	•	•
—	—	—	—	—	—	—	—	—	—	—
—	—	—	—	—	—	—	—	—	—	—
•	•	•	•	•	•	•	—	—	—	—
•	SIDE PANEL	SIDE PANEL	•	•	SIDE PANEL	SIDE PANEL	SIDE PANEL	SIDE PANEL	SIDE PANEL	SIDE PANEL
—	—	—	—	—	—	—	—	—	—	—
6, 9 HOURS	6, 9 HOURS	6, 9 HOURS	6, 9 HOURS	6, 9 HOURS	6, 9 HOURS	6, 9 HOURS	6, 9 HOURS	6, 9 HOURS	6, 9 HOURS	6, 9 HOURS
•	•	•	•	•	•	•	•	•	•	•
•	•	•	•	•	•	•	•	•	•	•
1271 W	1273 W	1273 W	1269 W	1269 W	1023 W	1022 W	403 W	409 W	1023 W	1022 W
3.9 ft (1.2 m)	3.9 ft (1.2 m)	3.9 ft (1.2 m)	3.9 ft (1.2 m)	3.9 ft (1.2 m)	3.9 ft (1.2 m)	3.9 ft (1.2 m)	3.9 ft (1.2 m)	3.9 ft (1.2 m)	3.9 ft (1.2 m)	3.9 ft (1.2 m)
07 - 0.11 gal/min	0.07 - 0.11 gal/min	0.07 - 0.11 gal/min	0.07 - 0.11 gal/min	0.07 - 0.11 gal/min	0.07 - 0.09 gal/min	0.07 - 0.09 gal/min	0.07 - 0.11 gal/min	0.07 - 0.11 gal/min	0.07 - 0.09 gal/min	0.07 - 0.09 gal/min
07 - 0.11 gal/min	0.07 - 0.11 gal/min	0.07 - 0.11 gal/min	0.07 - 0.11 gal/min	0.07 - 0.11 gal/min	–	–	–	–	–	–
08 - 0.11 gal/min	0.08 - 0.11 gal/min	0.08 - 0.11 gal/min	0.08 - 0.11 gal/min	0.08 - 0.11 gal/min	0.07 - 0.09 gal/min	0.07 - 0.09 gal/min	0.08 - 0.11 gal/min	0.08 - 0.11 gal/min	0.07 - 0.09 gal/min	0.07 - 0.09 gal/min
95°F - 104°F	95°F - 104°F	95°F - 104°F	95°F - 104°F	95°F - 104°F	95°F - 104°F	95°F - 104°F	95°F - 104°F	95°F - 104°F	95°F - 104°F	95°F - 104°F
95°F - 140°F	95°F - 140°F	95°F - 140°F	95°F - 140°F	95°F - 140°F	95°F - 140°F	95°F - 140°F	95°F - 140°F	95°F - 140°F	–	–
8.83 ft³/min	8.83 ft³/min	8.83 ft³/min	8.83 ft³/min	8.83 ft³/min	8.83 ft³/min	8.83 ft³/min	8.83 ft³/min	8.83 ft³/min	–	–
82° F - 97° F	82° F - 97° F	82° F - 97° F	82° F - 97° F	82° F - 97° F	82° F - 97° F	82° F - 97° F	82° F - 97° F	82° F - 97° F	82° F - 97° F	82° F - 97° F
5 psi - 108.75 psi	7.25 psi - 108.75 psi	7.25 psi - 108.75 psi	7.25 psi - 108.75 psi	7.25 psi - 108.75 psi	7.25 psi - 108.75 psi	7.25 psi - 108.75 psi	7.25 psi - 108.78 psi	7.25 psi – 108.78 psi	7.25 psi - 108.75 psi	7.25 psi - 108.75 psi
32°F - 95°F	32°F - 95°F	32°F - 95°F	32°F - 95°F	32°F – 95°F	32°F - 95°F	32°F - 95°F	32°F - 95°F	32°F – 95°F	32°F - 95°F	32°F - 95°F
32°F - 104°F	32°F - 104°F	32°F - 104°F	32°F - 104°F	32°F - 104°F	32°F - 104°F	32°F - 104°F	32°F - 104°F	32°F - 104°F	32°F - 104°F	32°F - 104°F
15 "W x 19-1/8" D x 5-1/2" H	18-7/16" W x 21" D x 5-1/2" H	18-7/16" W x 19-3/32" D x 5-1/2" H	15" W x 20-15/16" D x 5-3/8" H	15 1/16" W x 19" D x 5-3/8" H	18-5/8" W x 20-7/8" D x 6-5/8" H	18-5/8" W x 19" D x 6-5/8" H	18-9/16" W x 20-7/8" D x 5-13/16" H	18-9/16" W x 19" D x 5-13/16" H	18-5/8" W x 20-7/8" D x 6-5/8" H	18-5/8" W x 19" D x 6-5/8" H

WASHLET®
ONE-PIECE TOILET COMPATIBILITY CHART



ONE-PIECE TOILET

Toilet tank and bowl are seamlessly integrated into a single unit.

Refer to the chart below for WASHLET compatibility by toilet model.

TYPE	SHAPE	NAME	S7A/S7	KS6	S5	S2	KS5	KS2	KC2	S1
ONE-PIECE TOILETS	ELONGATED	AIMES®	●	●	●	●	●	●	●	●
		AQUIA® IV	●	●	●	●	●	●	●	●
		AURORA™	●	●	●	●	●	●	●	●
		AURORA™ 1G	●	●	●	●	●	●	●	●
		GUINEVERE®	●	●	●	●	●	●	●	●
		LEGATO®	●	●	●	●	●	●	●	●
		NEXUS®	●	●	●	●	●	●	●	●
		NEXUS® 1G	●	●	●	●	●	●	●	●
		PROMENADE® II	●	●	●	●	●	●	●	●
		PROMENADE® II 1G	●	●	●	●	●	●	●	●
		REDINGTON™	●	●	●	●	●	●	●	●
		REDINGTON™ 1G	●	●	●	●	●	●	●	●
		SOIRÉE®	●	●	●	●	●	●	●	●
		ULTRAMAX®	●	●	●	●	●	●	●	●
		ULTRAMAX® - LOW PROFILE	●	●	●	●	●	●	●	●
	ROUND	ULTRAMAX®*	●	—	●	●	●	●	●	●

NOTES: ● Compatible — Not Compatible * Not WASHLET+ Compatible

WASHLET®
TWO-PIECE AND WALL-HUNG TOILET COMPATIBILITY CHART



TWO-PIECE TOILET

Toilet tank and bowl are separate components assembled into a single unit.



WALL-HUNG TOILET

Wall-mounted toilet bowl with the tank concealed in the wall.

Refer to the chart below for WASHLET compatibility by toilet model.

TYPE	SHAPE	NAME	S7A/S7	KS6	S5	S2	KS5	KS2	KC2	S1
TWO-PIECE TOILETS	ELONGATED	AQUIA® IV	●	●	●	●	●	●	●	●
		AQUIA® IV ARC								
		AQUIA® IV CUBE								
		CONNELLY®								
		DRAKE®								
		DRAKE® TRANSITIONAL								
		ECO DARTMOUTH®*								
		ENTRADA®*								
		GLASTON™								
		GLASTON™ 1G								
		NEXUS® 1G								
		PROMENADE® II								
		PROMENADE® II 1G								
	ROUND	DRAKE®*	●	—	●	●	●	●	●	●
		DRAKE® TRANSITIONAL*								
		ENTRADA®*								
WALL-HUNG TOILETS	ELONGATED	AP	●	●	●	●	●	●	●	●
		EP								
		RP								
		SP								

WASHLET® INSTALLATION REQUIREMENTS

For when your existing toilet is in need of an upgrade.

The following diagrams detail the approximate measurements and requirements for installing most WASHLET models on existing toilets. Note that some styles of toilets may not allow the WASHLET to fit properly due to certain contours where the tank meets the bowl.

ELONGATED WASHLET

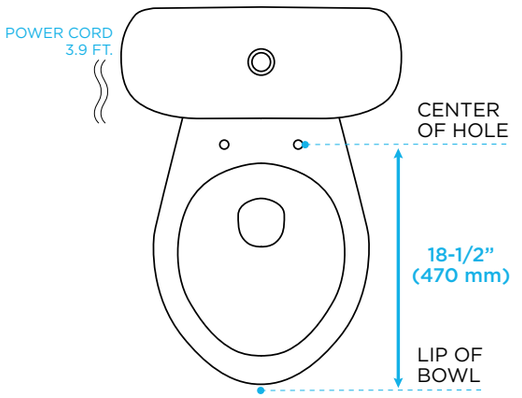

1. Elongated seats approximately 18-1/2 inches (470 mm) from mounting holes to front of bowl.

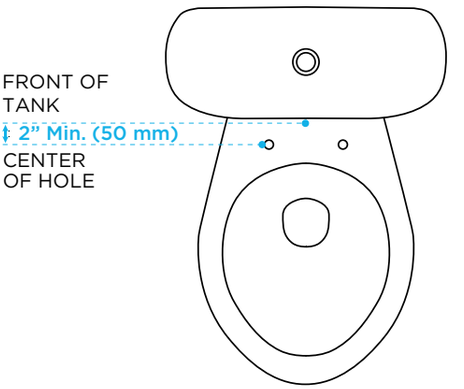

2. Minimum requirement for front face of tank to the center of mounting holes: S7A, S7, S5, S2 & KS6: 2 inches (50 mm)

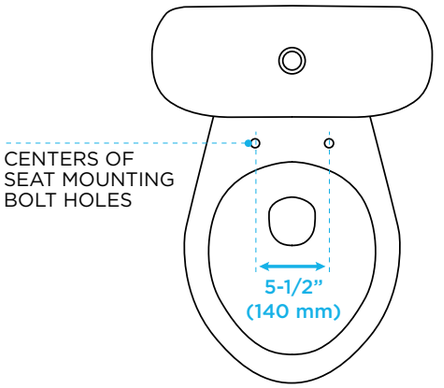

3. Approximately 5-1/2 inches (140 mm) from the centers of the seat mounting holes.

ROUND WASHLET

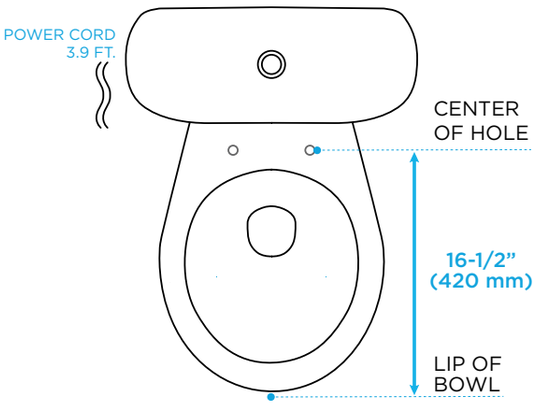

1. Round seats approximately 16-1/2 inches (420 mm) from mounting holes to front of bowl.

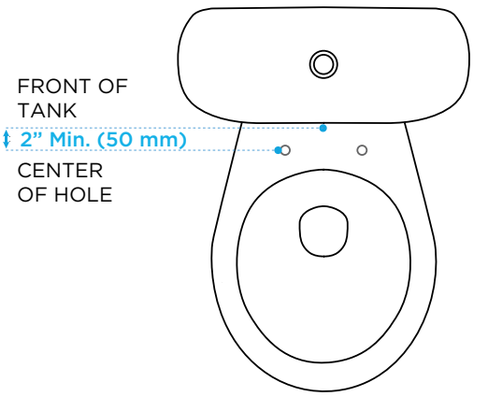

2. Minimum requirement for front face of tank to the center of mounting holes: S7A, S7, S5, & S2: 2 inches (50 mm)

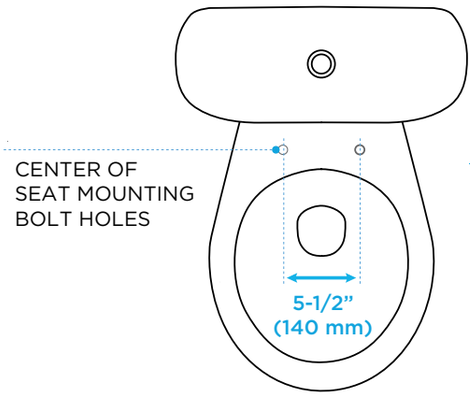

3. Approximately 5-1/2 inches (140 mm) from the centers of the seat mounting holes.

TOTO USA, INC.
1155 SOUTHERN ROAD
MORROW, GA 30260
800-350-8686

www.washlet.com
www.totousa.com